INSTALLATION, OPERATION AND MAINTENANCE

ADVANCEDAIR

0160
Fire Damper

Index

	Page
Introduction and Health & Safety	**3**
Quick reference summary of installs	**4-5**
Fire damper – Model 0160	
One hour flexible wall – AFS	**6**
Two hour flexible wall – AFS	**7**
Two hour flexible wall – AFS with drop rods in wall	**8**
Two hour flexible wall – multi-section AFS with drop rods two sides	**9**
One hour rigid wall – AFS	**10**
Two hour rigid wall – AFS	**11**
Two hour rigid wall – multi-section AFS with drop rods two sides	**12**
Two hour rigid wall – AFS up against lintel	**13**
Two hour rigid wall – HEVAC	**14**
Two hour flexible wall – drywall plate with cleats	**15**
Two hour rigid wall – drywall plate with cleats	**16**
90 minute flexible wall – AFS with Flexicoat for deflection	**17-18**
90 minute rigid wall – AFS with Flexicoat for deflection	**19-20**
Two hour 107mm British Gypsum Shaftwall – AFS	**21**
Two hour 117mm British Gypsum Shaftwall – AFS	**22**
90 minute Siniat Shaftwall – AFS	**23**
Two hour Trimoterm wall	**24-25**
Two hour rigid floor – AFS	**26**
Two hour rigid floor – HEVAC	**27**
Additional notes for AFS installations	**28-29**
Duct connections	**30**
Slab deflection issues and solutions	**31**
Spacing around damper installations	**32**
Mixed supporting constructions	**33**
Operation and maintenance	**34**
DW145 Fire Damper Certificate	**35**

Introduction

Advanced Air (UK) Ltd have been manufacturing a comprehensive range of fire dampers and motorised fire dampers since 1975. We have always taken pride in our products and tested to the highest standards, originally to BS476 and now more stringent testing to CE labelling under the Construction Product Regulation which was introduced 1st July 2013.

All our fire dampers and motorised fire dampers have been tested to BS EN 1366-2, and our smoke control dampers tested to both BS EN 1366-2 and BS EN 1366-10. This is to cover a variety of installations used on sites today. Under CE labelling all dampers must follow the Product Standards BS EN 15650 and BS EN 12101-8 which ensures the product is consistent and supplied to the same specification and standard as tested. Any deviation or changes from the installations in this manual would require the dampers to be subject to a new test or approval sought from Local Building Control.

In line with product standards we are pleased to offer this installation manual covering installation, operation and maintenance instructions together with Health and Safety information. We have also included within this manual an example of the Fire Damper Checklist DW145 Inspection and Handover Check Sheet which is to be completed by the installer. A separate certificate is required per damper.

The installations contained in this manual cover most installations on site. However, there are still installations which Advanced Air (UK) Ltd have not yet tested. We are continually reviewing requirements and continuously developing the products. As additional installation tests are carried out and classified, installations will be added to this manual, and the Declaration of Performance (DoP) updated accordingly.

Health and Safety

Any instruction contained within this manual must be undertaken by competent trained personnel. When completing the installation standard PPE should be used, steel toe cap boots, hard hat, gloves, protective eyewear along with any other specific site or material instructions.

The size and weight of dampers vary, and it may require two or more persons to safely handle and move them. Do not lift the dampers by the blades or the actuator.

For the installation of dampers at high level, the correct lifting equipment shall be used in accordance with the Work at Height Regulations 2005 and specific site rules.

All waste materials should be collected and disposed of defined by the suppliers.

Specification and Ordering

This document is intended to provide technical information only – for specification and ordering advice, please contact our Sales Team on 01842 765 657.

Quick reference summary of installs

0160 Series with AFS

Wall type	Duration (mins)	Wall thickness	Damper support
Rigid construction (Blockwork / concrete / masonry walls)	120	Minimum 131mm (minimum 136mm if multi-section)	Drop rods one side, in wall (both sides if multi-section)
	90	**NO** test data available	
	60	Minimum 94mm	Drop rods one side
	30	**NO** test data available	
Flexible construction (Plasterboard walls)	120	Min. 131mm (minimum 136mm if multi-section)	Drop rods one side, in wall (both sides if multi-section)
	90	**NO** test data available	
	60	Minimum 94mm	Drop rods one side
	30	**NO** test data available	
Rigid construction (Concrete floors)	120	Minimum 150mm	40 x 40 x 4mm angle (supplied by others)
	90	**NO** test data available	
Flexible construction (Flexicoat for deflection)	90	Minimum 94mm	Drop rods both sides
Rigid construction (Flexicoat for deflection)	90	Minimum 94mm	Drop rods both sides
British Gypsum Shaftwall A306035, A306036 or A306044	120	Minimum 107mm	Drop rods one side
British Gypsum Shaftwall A306036 or A306044	120	Minimum 117mm	Drop rods one side
Siniat Shaftwall IWS-221 RNS 104 MOD	90	Minimum 85mm	Drop rods one side

0160 Series with HEVAC

Wall type	Duration (mins)	Wall thickness	Damper support
Rigid construction (Blockwork / concrete / masonry walls)	120	Minimum 150mm	Steel bend-out tabs encased in cement
	90	**NO** test data available	
	60	**NO** test data available	
	30	**NO** test data available	
Flexible construction (Plasterboard walls)	120	**NO** test data available	
	90	**NO** test data available	
	60	**NO** test data available	
	30	**NO** test data available	
Rigid construction (Concrete floors)	120	Minimum 150mm	Steel bend-out tabs encased in cement
	90	**NO** test data available	

Quick reference summary of installs

0160 Series with drywall plate

Wall type	Duration (mins)	Wall thickness	Damper support
Rigid construction (Blockwork / concrete / masonry walls)	120	Minimum 131mm	Attached to wall face on one side
	90	**NO** test data available	
	60	**NO** test data available	
	30	**NO** test data available	
Flexible construction (Plasterboard walls)	120	Minimum 131mm	Attached to wall face on one side
	90	**NO** test data available	
	60	**NO** test data available	
	30	**NO** test data available	
Rigid construction (Concrete floors)	120	**NO** test data available	
	90	**NO** test data available	

0160 Series with non-standard supporting constructions

Wall type	Duration (mins)	Wall thickness	Damper support
Rigid construction up against lintel (Blockwork / concrete / masonry walls)	120	Minimum 150mm	AFS drop rods both sides
Trimoterm sandwich panel	120	Minimum 120mm	Attached to wall face on one side

FIRE – 0160 ADJUSTABLE FRAME SYSTEM FOR ONE HOUR FLEXIBLE SUPPORTING CONSTRUCTION (SUPPORT ONE SIDE)

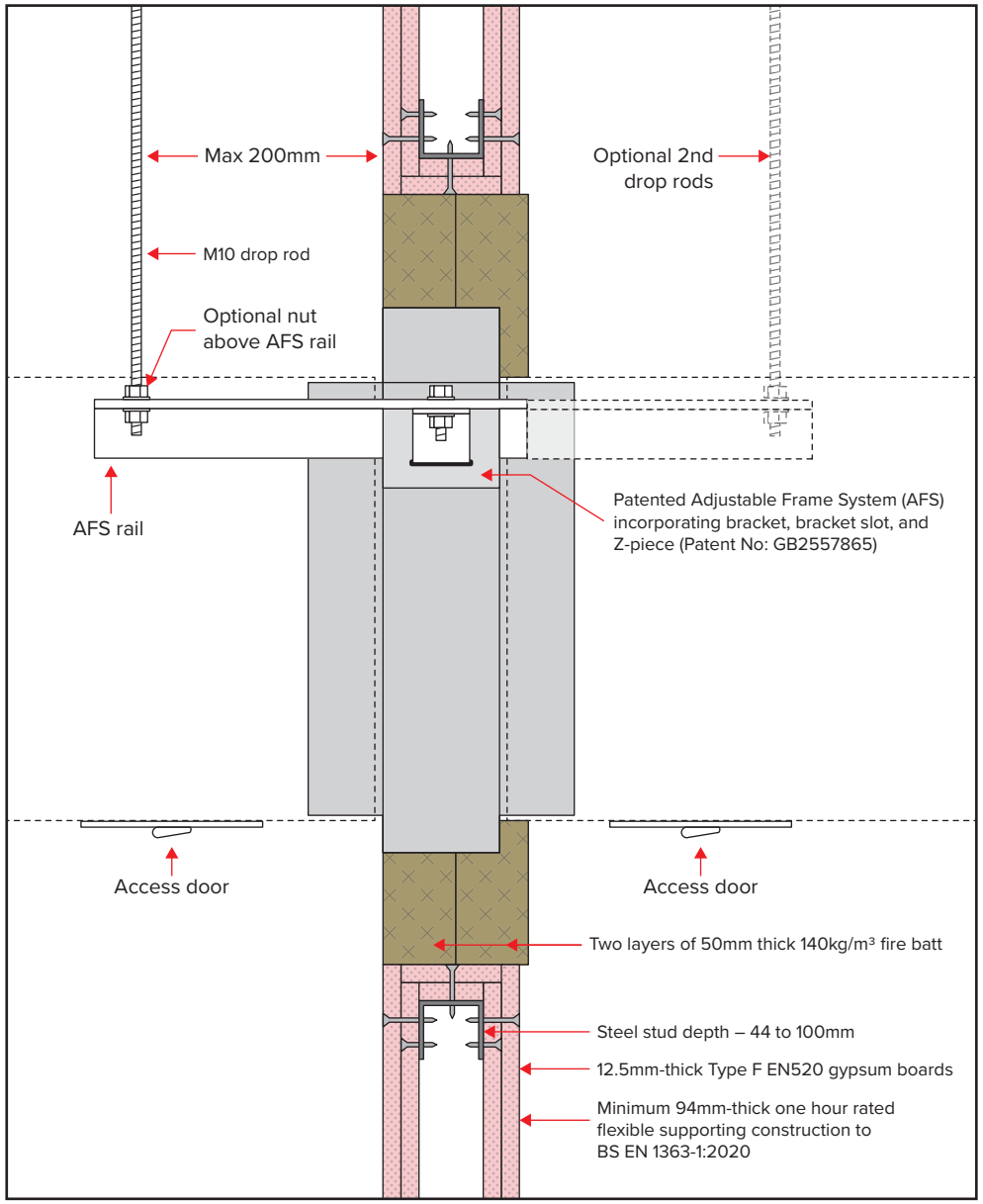

Preparation

1. Ensure that the damper is kept in a clean dry environment and that there is no damage to the damper.
2. Remove all the packaging and transit ties before installation.
3. Work out the opening size to be cut using the adjacent table.

Nom. duct width	Opening width min.	Opening width max.
100-1,000mm	Nom. duct +194mm	Nom. duct +350mm

Nom. duct height	Opening height min.	Opening height max.
100mm	Nom. duct +100mm	Nom. duct +350mm
101-300mm	Nom. duct +125mm	Nom. duct +375mm
301-525mm	Nom. duct +150mm	Nom. duct +400mm
526-700mm	Nom. duct +175mm	Nom. duct +425mm
701-925mm	Nom. duct +200mm	Nom. duct +450mm
926-1,000mm	Nom. duct +225mm	Nom. duct +475mm

NOTE – Dimensions above apply to rectangular, flat oval and circular spigots. Please also see guidance later in this document regarding AFS dampers installed in fire batt.

Installation sequence

4. The drywall will consist of two layers of 12.5mm plasterboard each side of steel studwork with an optional mineral wool insulation. The opening will be a letterbox construction with overlapping layers of plasterboard with an opening clearance around the damper casing in line with the above table.
5. Two M10 drop rods per fire damper shall be fitted on one side of the drywall. These should be securely installed in line with the manufacturer's fixing instructions in a position to match the AFS rail.
6. The drop rods may have a nut screwed on for clamping the rail from above.
7. Slide the AFS rails on each side of the damper into the brackets and insert the "Z" piece into the bracket slot pushing it up against the underside of the rail. Insert the 8mm bolt from above into the slot through the "Z" piece fitting the nut until tight to secure the rail.
8. The damper should be mounted centrally in the opening flush with the wall on the side with the drop rods, as detailed in the drawing. The drop rods are to slide through the slots in the rail and a nut screwed on to take the support of the damper rail. The damper must then be levelled and when in the correct position the nut above the rail should be tightened against the rail.
9. The galvanised mild steel ductwork connecting to the damper spigots must overlap by up to 40mm, leaving a minimum 10mm clearance for any duct expansion in a fire situation.
10. The galvanised mild steel ductwork connections must be sealed with an approved galvanised mild steel ductwork sealer and fixed with low resistance fixings such as aluminium rivets that will melt at high temperature allowing the duct to break away without effecting the integrity of the installation.
11. The connecting galvanised mild steel ductwork must be independently supported within one metre of the connections and have been installed in accordance with DW144.
12. The gap between the damper and the wall opening will need filling with two layers of 50mm thick 140kg/m³ fire batt cut to an interference fit and pushed in to place. All cut edges must be sealed with a fire batt sealant to BS EN 13501-2. A fire rated intumescent mastic to BS EN 13501-2 shall be applied to each joint.
13. For full adherence to DW145, access doors should be fitted on both sides of the damper for inspection and maintenance of the damper (DW145 clause 9.7).
14. When the damper installation has been completed checks should be made to ensure the AFS rails are secure and there is no movement, operation of the damper should be checked.
15. Complete DW145 Fire Damper Certificate.

PRODUCT **0160 WITH AFS RAIL (WALL)**	APPLICATION **FLEXIBLE SUPPORTING CONSTRUCTION**
CLASSIFICATION REPORT NO. **EFR-21-001846**	CLASSIFICATION **E60 (ve i ←→ o)**
TESTED INSTALLATION METHOD SHOWN. DIFFERING INSTALLATION METHODS TO THIS MUST BE APPROVED BY THE BUILDING CONTROL AUTHORITY (BCA) BEFORE PROCEEDING.	

FIRE – 0160 ADJUSTABLE FRAME SYSTEM FOR TWO HOUR FLEXIBLE SUPPORTING CONSTRUCTION (SUPPORT ONE SIDE)

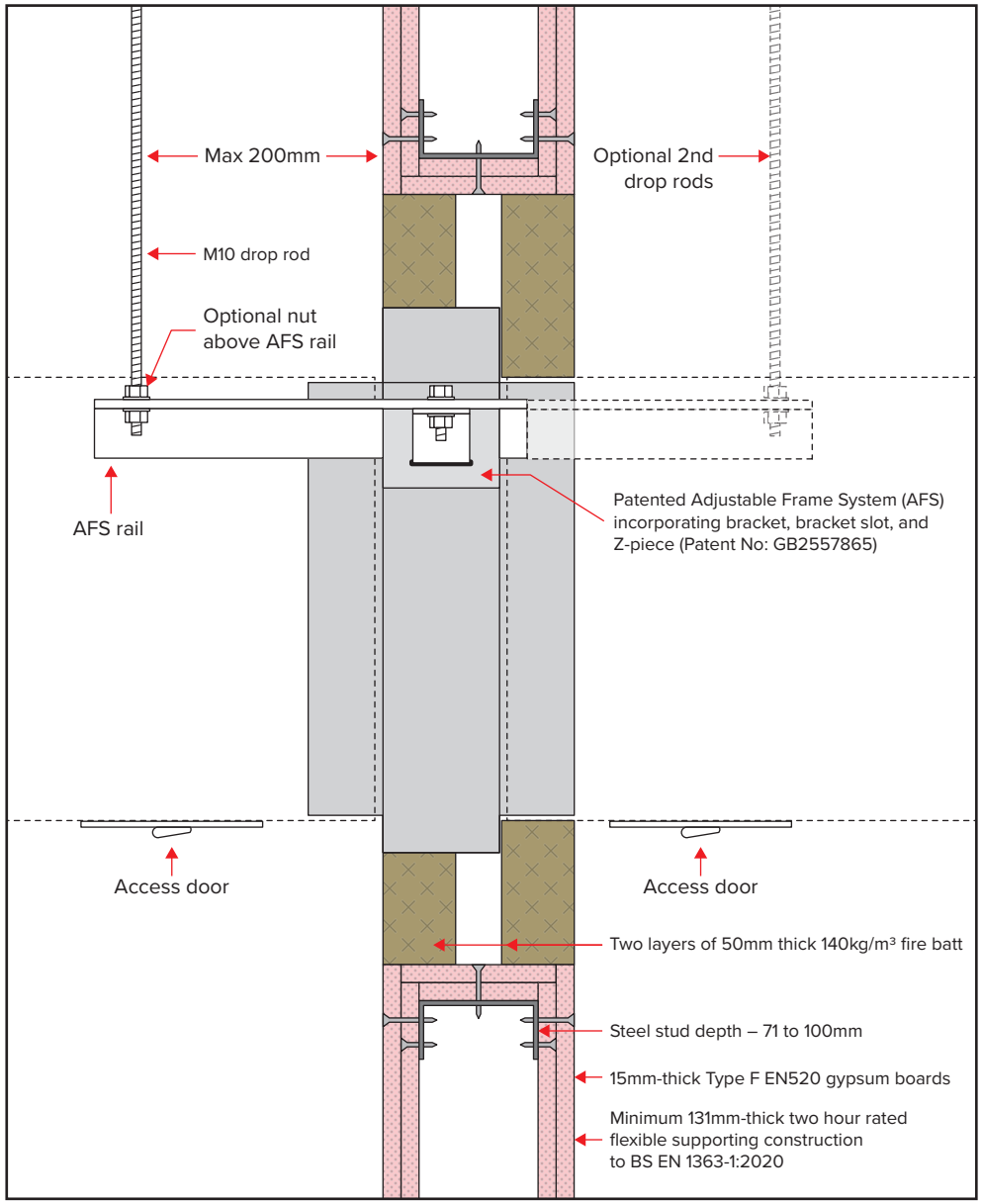

Preparation

1 Ensure that the damper is kept in a clean dry environment and that there is no damage to the damper.

2 Remove all the packaging and transit ties before installation.

3 Work out the opening size to be cut using the adjacent table.

Nom. duct width	Opening width min.	Opening width max.
100-1,000mm	Nom. duct +194mm	Nom. duct +350mm

Nom. duct height	Opening height min.	Opening height max.
100mm	Nom. duct +100mm	Nom. duct +350mm
101-300mm	Nom. duct +125mm	Nom. duct +375mm
301-525mm	Nom. duct +150mm	Nom. duct +400mm
526-700mm	Nom. duct +175mm	Nom. duct +425mm
701-925mm	Nom. duct +200mm	Nom. duct +450mm
926-1,000mm	Nom. duct +225mm	Nom. duct +475mm

NOTE – Dimensions above apply to rectangular, flat oval and circular spigots. Please also see guidance later in this document regarding AFS dampers installed in fire batt.

Installation sequence

4 The drywall will consist of two layers of 15mm plasterboard each side of steel studwork with an optional mineral wool insulation. The opening will be a letterbox construction with overlapping layers of plasterboard with an opening clearance around the damper casing in line with the above table.

5 Two M10 drop rods per fire damper shall be fitted on one side of the drywall. These should be securely installed in line with the manufacturer's fixing instructions in a position to match the AFS rail.

6 The drop rods may have a nut screwed on for clamping the rail from above.

7 Slide the AFS rails on each side of the damper into the brackets and insert the "Z" piece into the bracket slot pushing it up against the underside of the rail. Insert the 8mm bolt from above into the slot through the "Z" piece fitting the nut until tight to secure the rail.

8 The damper should be mounted centrally in the opening flush with the wall on the side with the drop rods, as detailed in the drawing. The drop rods are to slide through the slots in the rail and a nut screwed on to take the support of the damper rail. The damper must then be levelled and when in the correct position the nut above the rail should be tightened against the rail.

9 The galvanised mild steel ductwork connecting to the damper spigots must overlap by up to 40mm, leaving a minimum 10mm clearance for any duct expansion in a fire situation.

10 The galvanised mild steel ductwork connections must be sealed with an approved galvanised mild steel ductwork sealer and fixed with low resistance fixings such as aluminium rivets that will melt at high temperature allowing the duct to break away without effecting the integrity of the installation.

11 The connecting galvanised mild steel ductwork must be independently supported within one metre of the connections and have been installed in accordance with DW144.

12 The gap between the damper and the wall opening will need filling with two layers of 50mm thick 140kg/m³ fire batt cut to an interference fit and pushed in to place. All cut edges must be sealed with a fire batt sealant to BS EN 13501-2. A fire rated intumescent mastic to BS EN 13501-2 shall be applied to each joint.

13 For full adherence to DW145, access doors should be fitted on both sides of the damper for inspection and maintenance of the damper (DW145 clause 9.7).

14 When the damper installation has been completed checks should be made to ensure the AFS rails are secure and there is no movement, operation of the damper should be checked.

15 Complete DW145 Fire Damper Certificate.

PRODUCT **0160 WITH AFS RAIL (WALL)**	APPLICATION **FLEXIBLE SUPPORTING CONSTRUCTION**
CLASSIFICATION REPORT NO. **EFR-21-001846**	CLASSIFICATION **E120 (ve i ←→ o)**
TESTED INSTALLATION METHOD SHOWN. DIFFERING INSTALLATION METHODS TO THIS MUST BE APPROVED BY THE BUILDING CONTROL AUTHORITY (BCA) BEFORE PROCEEDING.	

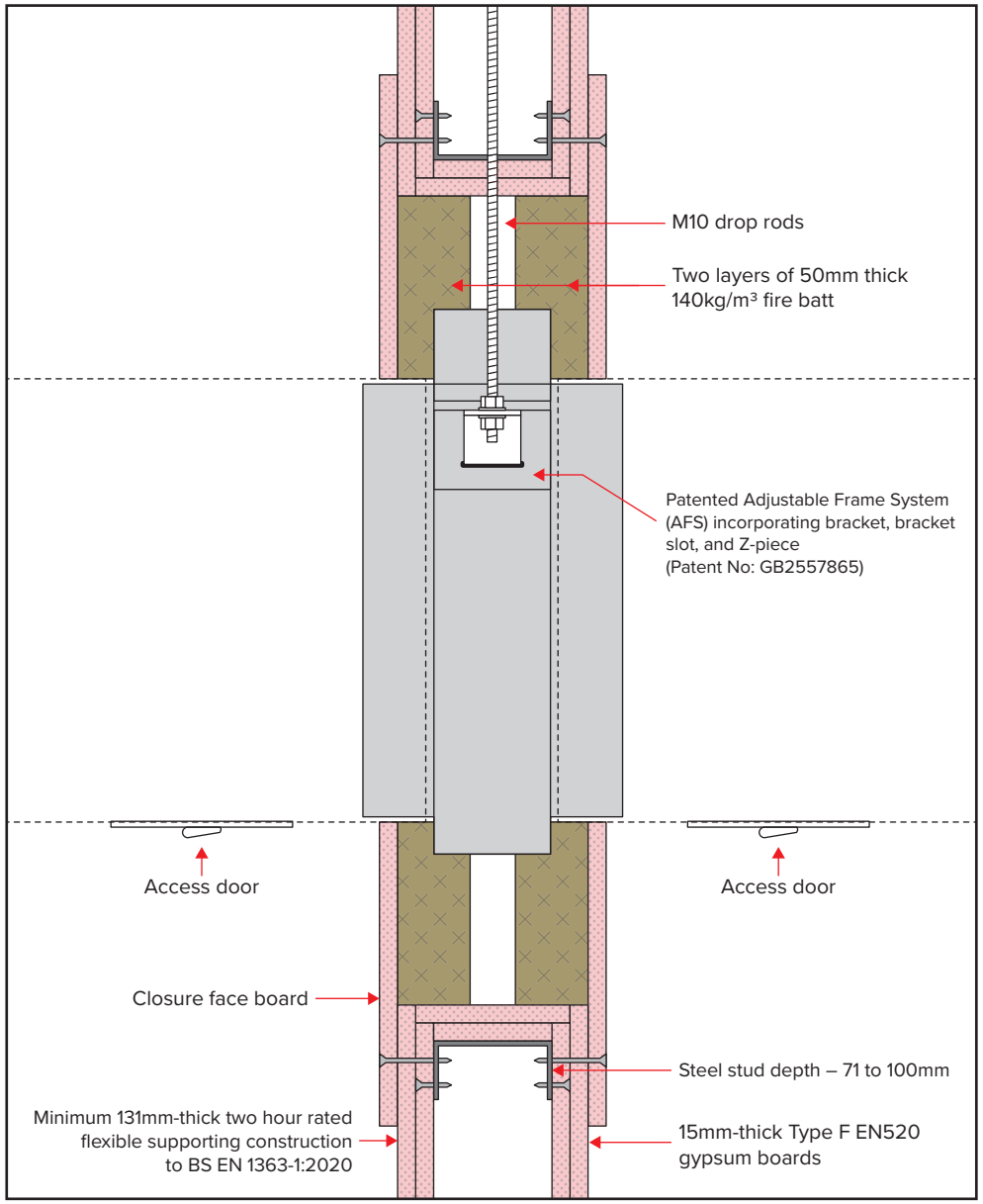

Preparation

1. Ensure that the damper is kept in a clean dry environment and that there is no damage to the damper.
2. Remove all the packaging and transit ties before installation.
3. Work out the opening size to be cut using the adjacent table.

Nom. duct width	Opening width min.	Opening width max.
100-1,000mm	Nom. duct +194mm	Nom. duct +350mm

Nom. duct height	Opening height min.	Opening height max.
100mm	Nom. duct +100mm	Nom. duct +350mm
101-300mm	Nom. duct +125mm	Nom. duct +375mm
301-525mm	Nom. duct +150mm	Nom. duct +400mm
526-700mm	Nom. duct +175mm	Nom. duct +425mm
701-925mm	Nom. duct +200mm	Nom. duct +450mm
926-1,000mm	Nom. duct +225mm	Nom. duct +475mm

NOTE – Dimensions above apply to rectangular, flat oval and circular spigots. Please also see guidance later in this document regarding AFS dampers installed in fire batt.

Installation sequence

4. The drywall will consist of two layers of 15mm plasterboard each side of steel studwork with an optional mineral wool insulation. The opening will be a letterbox construction with overlapping layers of plasterboard with an opening clearance around the damper casing in line with the above table.
5. Two M10 drop rods per fire damper shall be fitted centrally within the flexible wall fixed by steel anchors into the slab or soffit above. These should be securely installed in line with the manufacturer's fixing instructions in a position to match the AFS rail.
6. The drop rods may have a nut screwed on for clamping the rail from above.
7. Slide the AFS rails on each side of the damper into the brackets and insert the "Z" piece into the bracket slot pushing it up against the underside of the rail. Insert the 8mm bolt from above into the slot through the "Z" piece fitting the nut until tight to secure the rail.
8. The damper should be mounted centrally in the opening as detailed in the drawing. The drop rods are to slide through the slots in the rail and a nut screwed on to take the support of the damper rail. The damper must then be levelled and when in the correct position the nut above the rail should be tightened against the rail.
9. The galvanised mild steel ductwork connecting to the damper spigots must overlap by up to 40mm, leaving a minimum 10mm clearance for any duct expansion in a fire situation.
10. The galvanised mild steel ductwork connections must be sealed with an approved galvanised mild steel ductwork sealer and fixed with low resistance fixings such as aluminium rivets that will melt at high temperature allowing the duct to break away without effecting the integrity of the installation.
11. The connecting galvanised mild steel ductwork must be independently supported within one metre of the connections and have been installed in accordance with DW144.
12. The gap between the damper and the wall opening will need filling with two layers of 50mm thick 140kg/m³ fire batt cut to an interference fit and pushed in to place. All cut edges must be sealed with a fire batt sealant to BS EN 13501-2. A fire rated intumescent mastic to BS EN 13501-2 shall be applied to each joint.
13. A closure face board of 15mm plasterboard is screwed to each side of the of the wall. It must fully cover the fire batt and overlap the opening by 50mm.
14. For full adherence to DW145, access doors should be fitted on both sides of the damper for inspection and maintenance of the damper (DW145 clause 9.7).
15. When the damper installation has been completed checks should be made to ensure the drop rods are secured to the cleats and there is no movement, operation of the damper should be checked.
16. Complete DW145 Fire Damper Certificate.

PRODUCT **0160 WITH AFS RAIL (WALL)**	APPLICATION **FLEXIBLE SUPPORTING CONSTRUCTION, SUPPORT IN WALL**
CLASSIFICATION REPORT NO. **EFR-21-001846**	CLASSIFICATION **E120 (ve i ←→ o)**
TESTED INSTALLATION METHOD SHOWN. DIFFERING INSTALLATION METHODS TO THIS MUST BE APPROVED BY THE BUILDING CONTROL AUTHORITY (BCA) BEFORE PROCEEDING.	

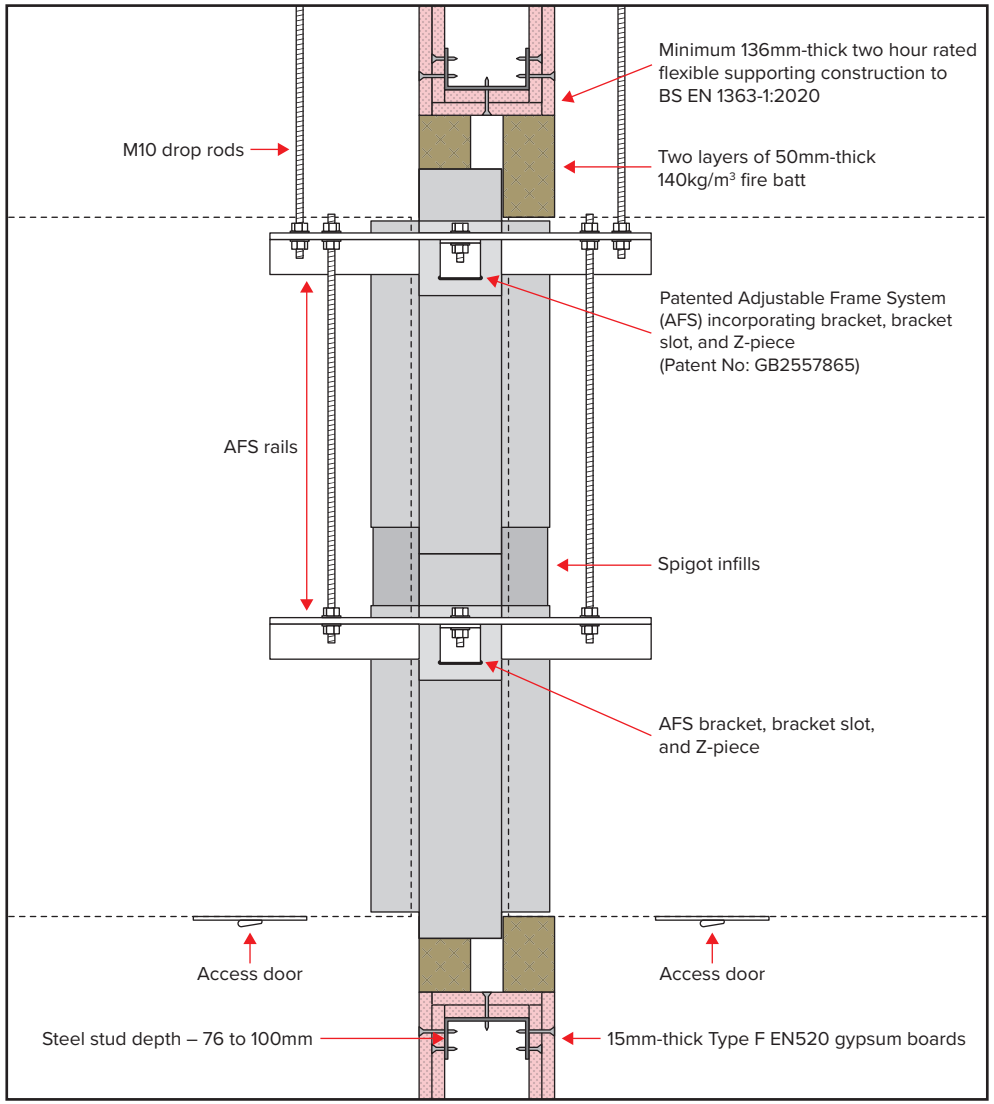

While we have tested a damper 2,000 x 2,000mm, larger sizes can be supplied but the installation will need to be checked by a competent structural engineer as stated in the Extended Fields of Application BS EN 15882-2:2015. With all larger sizes there should be a risk assessment carried out and a full method statement documented to ensure the correct lifting gear and safety precautions are put in place prior to the installation being carried out.

Preparation

1. Ensure that the damper is kept in a clean dry environment and that there is no damage to the damper.
2. Remove all the packaging and transit ties before installation.
3. Work out the opening size to be cut using the adjacent table.

Nom. duct width	Opening width min.	Opening width max.
1001-2,000mm	Nom. duct +194mm	Nom. duct +350mm

Nom. duct height	Opening height min.	Opening height max.
1001-1146mm	Nom. duct +150mm	Nom. duct +400mm
1147-1521mm	Nom. duct +175mm	Nom. duct +425mm
1552-1996mm	Nom. duct +200mm	Nom. duct +450mm
1997-2000mm	Nom. duct +225mm	Nom. duct +475mm

NOTE – Dimensions above apply to rectangular, flat oval and circular spigots. Please also see guidance later in this document regarding AFS dampers installed in fire batt.

Installation sequence

4. The drywall will consist of two layers of 15mm plasterboard each side of steel studwork with an optional mineral wool insulation. The opening will be a letterbox construction with overlapping layers of plasterboard with an opening clearance around the damper casing in line with the above table.
5. Two M10 drop rods per fire damper shall be fitted on both sides of the drywall. These should be securely installed in line with the manufacturer's fixing instructions in a position to match the AFS rail.
6. The drop rods should have a nut screwed on for clamping the rail from above. These rods will be secured to the two top AFS rails.
7. Slide the AFS rails in all the brackets and insert the "Z" piece into the bracket slot pushing it up against the underside of the rail. Insert the 8mm bolt from above into the slot through the "Z" piece fitting the nut until tight to secure the rail.
8. Additional drop rods should then be passed through the top and bottom rails and fully tightened.
9. The damper should be mounted centrally in the opening flush with the wall on one side. The anchored drop rods are to slide through the top rails and nuts are screwed on to take the support. The damper must then be levelled and when in the correct position the nut above the rail should be tightened against the rail.
10. The galvanised mild steel ductwork connecting to the damper spigots must overlap by up to 40mm, leaving a minimum 10mm clearance for any duct expansion in a fire situation.
11. The galvanised mild steel ductwork connections must be sealed with an approved galvanised mild steel ductwork sealer and fixed with low resistance fixings such as aluminium rivets that will melt at high temperature allowing the duct to break away without effecting the integrity of the installation.
12. The connecting galvanised mild steel ductwork must be independently supported within one metre of the connections and have been installed in accordance with DW144.
13. The gap between the damper and the wall opening will need filling with two layers of 50mm thick 140kg/m³ fire batt cut to an interference fit and pushed in to place. All cut edges must be sealed with a fire batt sealant to BS EN 13501-2. A fire rated intumescent mastic (to BS EN 13501-2) shall be applied to each joint.
14. For full adherence to DW145, access doors should be fitted on both sides of the damper for inspection and maintenance of the damper (DW145 clause 9.7).
15. When the damper installation has been completed checks should be made to ensure the AFS rails are secured to the damper and there is no movement, operation of the damper should be checked.
16. Complete DW145 Fire Damper Certificate.

PRODUCT **0160 MULTISECTION WITH AFS RAIL (WALL)**	APPLICATION **FLEXIBLE SUPPORTING CONSTRUCTION**
CLASSIFICATION REPORT NO. **EFR-21-001846**	CLASSIFICATION **E120 (ve i ←→ o)**
TESTED INSTALLATION METHOD SHOWN. DIFFERING INSTALLATION METHODS TO THIS MUST BE APPROVED BY THE BUILDING CONTROL AUTHORITY (BCA) BEFORE PROCEEDING.	

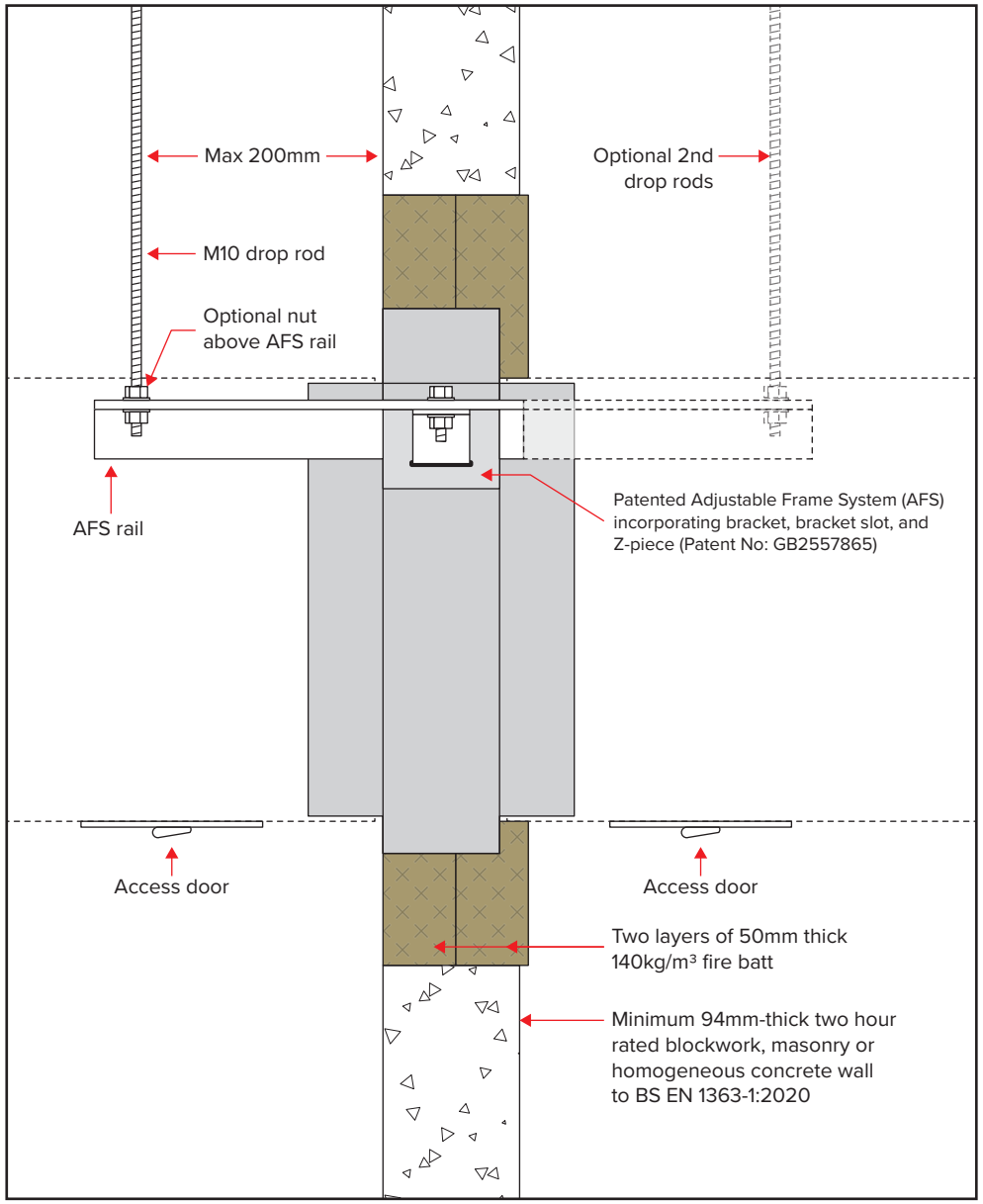

Preparation

1. Ensure that the damper is kept in a clean dry environment and that there is no damage to the damper.
2. Remove all the packaging before installation.
3. Work out the opening size to be cut using the adjacent table.

Nom. duct width	Opening width min.	Opening width max.
100-1,000mm	Nom. duct +194mm	Nom. duct +350mm

Nom. duct height	Opening height min.	Opening height max.
100mm	Nom. duct +100mm	Nom. duct +350mm
101-300mm	Nom. duct +125mm	Nom. duct +375mm
301-525mm	Nom. duct +150mm	Nom. duct +400mm
526-700mm	Nom. duct +175mm	Nom. duct +425mm
701-925mm	Nom. duct +200mm	Nom. duct +450mm
926-1,000mm	Nom. duct +225mm	Nom. duct +475mm

NOTE – Dimensions above apply to rectangular, flat oval and circular spigots. Please also see guidance later in this document regarding AFS dampers installed in fire batt.

Installation sequence

4. Two M10 drop rods shall be fitted on one side of the drywall.
5. The drop rods should have a nut screwed on for clamping the rail from above.
6. Slide the AFS rails on each side of the damper into the brackets and insert the “Z” piece into the bracket slot pushing it up against the underside of the rail. Insert the 8mm bolt from above into the slot through the “Z” piece fitting the nut until tight to secure the rail.
7. The damper should be centrally positioned in the opening with the access side flush with the wall, as detailed in the drawing. The drop rods are to slide through the slots in the rail and a nut screwed on to take the support of the damper rail. The damper must then be levelled and when in the correct position the optional nut above the rail should be tightened against the rail.
8. The galvanised mild steel ductwork connecting to the damper spigots must overlap by up to 40mm, leaving a minimum 10mm clearance for any duct expansion in a fire situation.
9. The galvanised mild steel ductwork connections must be sealed with an approved galvanised mild steel ductwork sealer and fixed with low resistance fixings such as aluminium rivets that will melt at high temperature allowing the duct to break away without affecting the integrity of the installation.
10. The connecting galvanised mild steel ductwork must be independently supported within one metre of the connections and have been installed in accordance with DW144.
11. The gap between the damper and the wall opening will need filling with two layers of 50mm thick 140kg/m³ fire batt cut to an interference fit and pushed in to place. A fire rated mastic will be applied to each joint.
12. For full adherence to DW145, access doors should be fitted on both sides of the damper for inspection and maintenance of the damper (DW145 clause 9.7).
13. When the damper installation has been completed checks should be made to ensure the AFS rails are secure and there is no movement, operation of the damper should be checked.
14. Complete DW145 Fire Damper Certificate.

PRODUCT **0160 WITH AFS RAIL (WALL)**	APPLICATION **RIGID CONSTRUCTION**
CLASSIFICATION REPORT NO. **EFR-21-001846**	CLASSIFICATION **E60 (ve i ←→ o)**
TESTED INSTALLATION METHOD SHOWN. DIFFERING INSTALLATION METHODS TO THIS MUST BE APPROVED BY THE BUILDING CONTROL AUTHORITY (BCA) BEFORE PROCEEDING.	

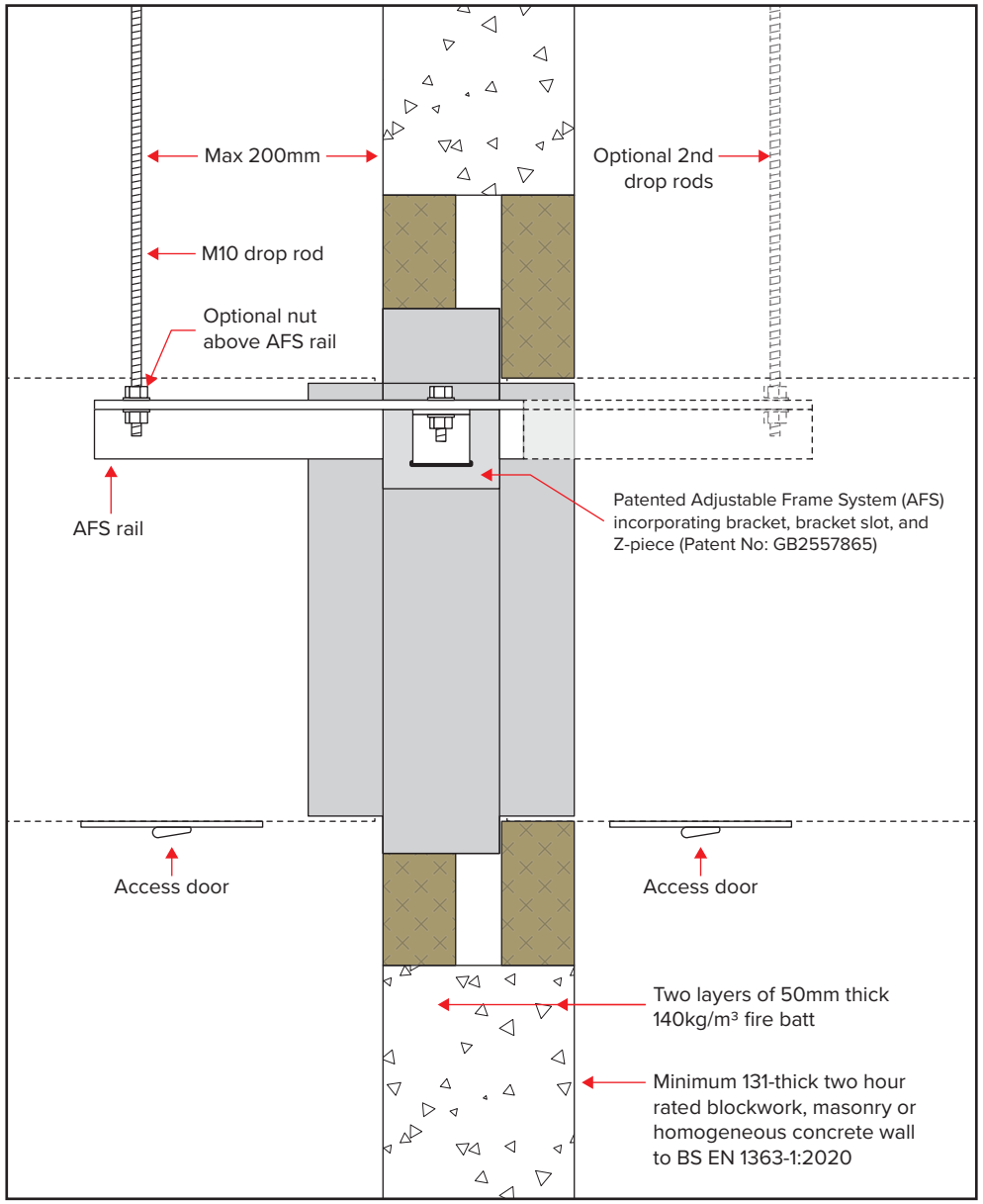

Preparation

1. Ensure that the damper is kept in a clean dry environment and that there is no damage to the damper.
2. Remove all the packaging before installation.
3. Work out the opening size to be cut using the adjacent table.

Nom. duct width	Opening width min.	Opening width max.
100-1,000mm	Nom. duct +194mm	Nom. duct +350mm

Nom. duct height	Opening height min.	Opening height max.
100mm	Nom. duct +100mm	Nom. duct +350mm
101-300mm	Nom. duct +125mm	Nom. duct +375mm
301-525mm	Nom. duct +150mm	Nom. duct +400mm
526-700mm	Nom. duct +175mm	Nom. duct +425mm
701-925mm	Nom. duct +200mm	Nom. duct +450mm
926-1,000mm	Nom. duct +225mm	Nom. duct +475mm

NOTE – Dimensions above apply to rectangular, flat oval and circular spigots. Please also see guidance later in this document regarding AFS dampers installed in fire batt.

Installation sequence

4. Two M10 drop rods shall be fitted on one side of the drywall.
5. The drop rods should have a nut screwed on for clamping the rail from above.
6. Slide the AFS rails on each side of the damper into the brackets and insert the “Z” piece into the bracket slot pushing it up against the underside of the rail. Insert the 8mm bolt from above into the slot through the “Z” piece fitting the nut until tight to secure the rail.
7. The damper should be centrally positioned in the opening with the access side flush with the wall, as detailed in the drawing. The drop rods are to slide through the slots in the rail and a nut screwed on to take the support of the damper rail. The damper must then be levelled and when in the correct position the optional nut above the rail should be tightened against the rail.
8. The galvanised mild steel ductwork connecting to the damper spigots must overlap by up to 40mm, leaving a minimum 10mm clearance for any duct expansion in a fire situation.
9. The galvanised mild steel ductwork connections must be sealed with an approved galvanised mild steel ductwork sealer and fixed with low resistance fixings such as aluminium rivets that will melt at high temperature allowing the duct to break away without affecting the integrity of the installation.
10. The connecting galvanised mild steel ductwork must be independently supported within one metre of the connections and have been installed in accordance with DW144.
11. The gap between the damper and the wall opening will need filling with two layers of 50mm thick 140kg/m³ fire batt cut to an interference fit and pushed in to place. A fire rated mastic will be applied to each joint.
12. For full adherence to DW145, access doors should be fitted on both sides of the damper for inspection and maintenance of the damper (DW145 clause 9.7).
13. When the damper installation has been completed checks should be made to ensure the AFS rails are secure and there is no movement, operation of the damper should be checked.
14. Complete DW145 Fire Damper Certificate.

PRODUCT **0160 WITH AFS RAIL (WALL)**	APPLICATION **RIGID CONSTRUCTION**
CLASSIFICATION REPORT NO. **EFR-21-001846**	CLASSIFICATION **E120 (ve i ←→ o)**
TESTED INSTALLATION METHOD SHOWN. DIFFERING INSTALLATION METHODS TO THIS MUST BE APPROVED BY THE BUILDING CONTROL AUTHORITY (BCA) BEFORE PROCEEDING.	

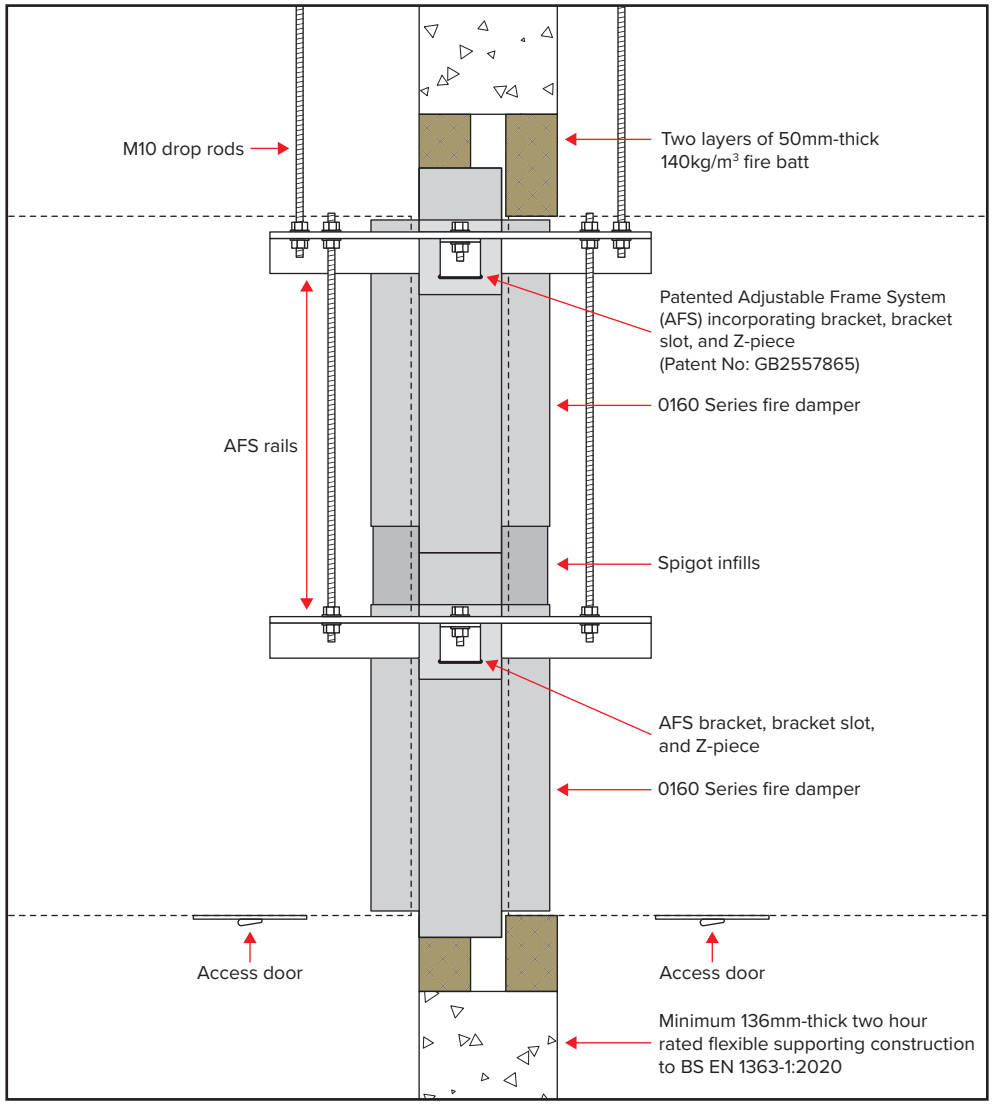

While we have tested a damper 2,000 x 2,000mm, larger sizes can be supplied but the installation will need to be checked by a competent structural engineer as stated in the Extended Fields of Application BS EN 15882-2:2015. With all larger sizes there should be a risk assessment carried out and a full method statement documented to ensure the correct lifting gear and safety precautions are put in place prior to the installation being carried out.

Preparation

1. Ensure that the damper is kept in a clean dry environment and that there is no damage to the damper.
2. Remove all the packaging and transit ties before installation.
3. Work out the opening size to be cut using the adjacent table.

Nom. duct width	Opening width min.	Opening width max.
1001-2,000mm	Nom. duct +194mm	Nom. duct +350mm

Nom. duct height	Opening height min.	Opening height max.
1001-1146mm	Nom. duct +150mm	Nom. duct +400mm
1147-1521mm	Nom. duct +175mm	Nom. duct +425mm
1552-1996mm	Nom. duct +200mm	Nom. duct +450mm
1997-2000mm	Nom. duct +225mm	Nom. duct +475mm

NOTE – Dimensions above apply to rectangular, flat oval and circular spigots. Please also see guidance later in this document regarding AFS dampers installed in fire batt.

Installation sequence

4. Two M10 drop rods per fire damper shall be fitted on both sides of the wall. These should be securely installed in line with the manufacturer's fixing instructions in a position to match the AFS rail.
5. The drop rods should have a nut screwed on for clamping the rail from above. These rods will be secured to the two top AFS rails.
6. Slide the AFS rails in all the brackets and insert the "Z" piece into the bracket slot pushing it up against the underside of the rail. Insert the 8mm bolt from above into the slot through the "Z" piece fitting the nut until tight to secure the rail.
7. Additional drop rods should then be passed through the top and bottom rails and fully tightened.
8. The damper should be mounted centrally in the opening flush with the wall on one side. The anchored drop rods are to slide through the top rails and nuts are screwed on to take the support. The damper must then be levelled and when in the correct position the nut above the rail should be tightened against the rail.
9. The galvanised mild steel ductwork connecting to the damper spigots must overlap by up to 40mm, leaving a minimum 10mm clearance for any duct expansion in a fire situation.
10. The galvanised mild steel ductwork connections must be sealed with an approved galvanised mild steel ductwork sealer and fixed with low resistance fixings such as aluminium rivets that will melt at high temperature allowing the duct to break away without effecting the integrity of the installation.
11. The connecting galvanised mild steel ductwork must be independently supported within one metre of the connections and have been installed in accordance with DW144.
12. The gap between the damper and the wall opening will need filling with two layers of 50mm thick 140kg/m³ fire batt cut to an interference fit and pushed in to place. All cut edges must be sealed with a firebatt sealant to BS EN 13501-2. A fire rated intumescent mastic (to BS EN 13501-2) shall be applied to each joint.
13. For full adherence to DW145, access doors should be fitted on both sides of the damper for inspection and maintenance of the damper (DW145 clause 9.7).
14. When the damper installation has been completed checks should be made to ensure the AFS rails are secured to the damper and there is no movement, operation of the damper should be checked.
15. Complete DW145 Fire Damper Certificate.

PRODUCT **0160 MULTISECTION WITH AFS RAIL (WALL)**	APPLICATION **RIGID SUPPORTING CONSTRUCTION**
CLASSIFICATION REPORT NO. **EFR-21-001846**	CLASSIFICATION **E120 (ve i ←→ o)**
TESTED INSTALLATION METHOD SHOWN. DIFFERING INSTALLATION METHODS TO THIS MUST BE APPROVED BY THE BUILDING CONTROL AUTHORITY (BCA) BEFORE PROCEEDING.	

FIRE – 0160 ADJUSTABLE FRAME SYSTEM FOR TWO HOUR RIGID SUPPORTING CONSTRUCTION UP AGAINST LINTEL

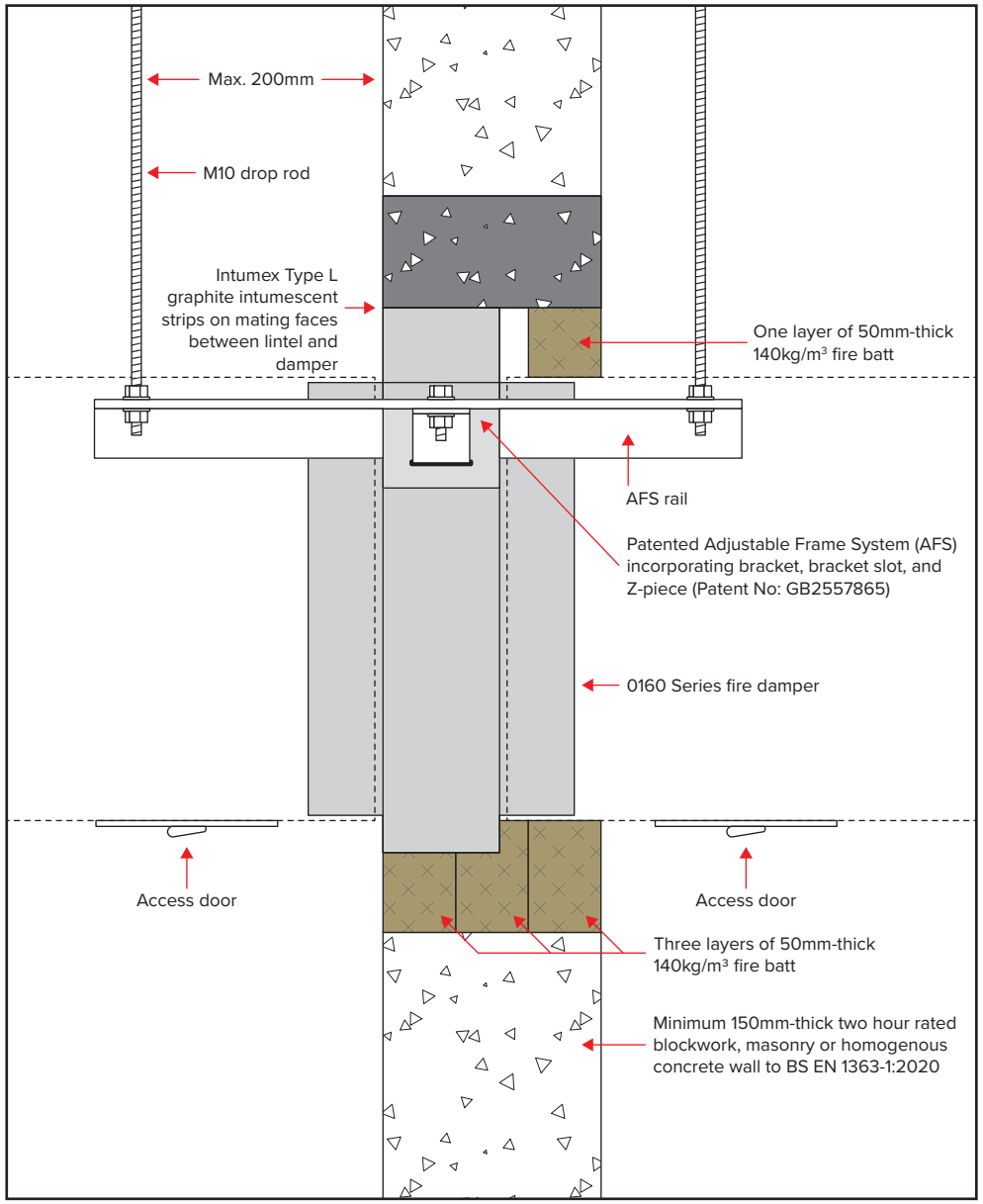

Preparation

1. Ensure that the damper is kept in a clean dry environment and that there is no damage to the damper.
2. Remove all the packaging before installation.
3. Work out the opening size to be cut using the adjacent table.

Nom. duct width	Opening width min.	Opening width max.
100-1,000mm	Nom. duct +194mm	Nom. duct +350mm

Nom. duct height	Opening height min.	Opening height max.
100mm	Nom. duct +100mm	Nom. duct +350mm
101-300mm	Nom. duct +125mm	Nom. duct +375mm
301-525mm	Nom. duct +150mm	Nom. duct +400mm
526-700mm	Nom. duct +175mm	Nom. duct +425mm
701-925mm	Nom. duct +200mm	Nom. duct +450mm
926-1,000mm	Nom. duct +225mm	Nom. duct +475mm

NOTE – Dimensions above apply to rectangular, flat oval and circular spigots. Please also see guidance later in this document regarding AFS dampers installed in fire batt.

Installation sequence

4. Two M10 drop rods shall be fitted on one side of the wall.
5. The drop rods should have a nut screwed on for clamping the rail from above.
6. Slide the AFS rails on each side of the damper into the brackets and insert the “Z” piece into the bracket slot pushing it up against the underside of the rail. Insert the 8mm bolt from above into the slot through the “Z” piece fitting the nut until tight to secure the rail.
7. The damper should be centrally positioned in the opening with the access side flush with the wall, as detailed in the drawing. The drop rods are to slide through the slots in the rail and a nut screwed on to take the support of the damper rail. The damper must then be levelled and when in the correct position the optional nut above the rail should be tightened against the rail.
8. The galvanised mild steel ductwork connecting to the damper spigots must overlap by up to 40mm, leaving a minimum 10mm clearance for any duct expansion in a fire situation.
9. The galvanised mild steel ductwork connections must be sealed with an approved galvanised mild steel ductwork sealer and fixed with low resistance fixings such as aluminium rivets that will melt at high temperature allowing the duct to break away without affecting the integrity of the installation.
10. The connecting galvanised mild steel ductwork must be independently supported within one metre of the connections and have been installed in accordance with DW144.
11. The gap between the damper and the wall opening will need filling with two layers of 50mm thick 140kg/m³ fire batt cut to an interference fit and pushed in to place. A fire rated mastic will be applied to each joint.
12. For full adherence to DW145, access doors should be fitted on both sides of the damper for inspection and maintenance of the damper (DW145 clause 9.7).
13. When the damper installation has been completed checks should be made to ensure the AFS rails are secure and there is no movement, operation of the damper should be checked.
14. Complete DW145 Fire Damper Certificate.

PRODUCT **0160 WITH AFS RAIL (WALL)**	APPLICATION **RIGID CONSTRUCTION**
CLASSIFICATION REPORT NO. **EFR-21-001846**	CLASSIFICATION **E120 (ve i → o)**
TESTED INSTALLATION METHOD SHOWN. DIFFERING INSTALLATION METHODS TO THIS MUST BE APPROVED BY THE BUILDING CONTROL AUTHORITY (BCA) BEFORE PROCEEDING.	

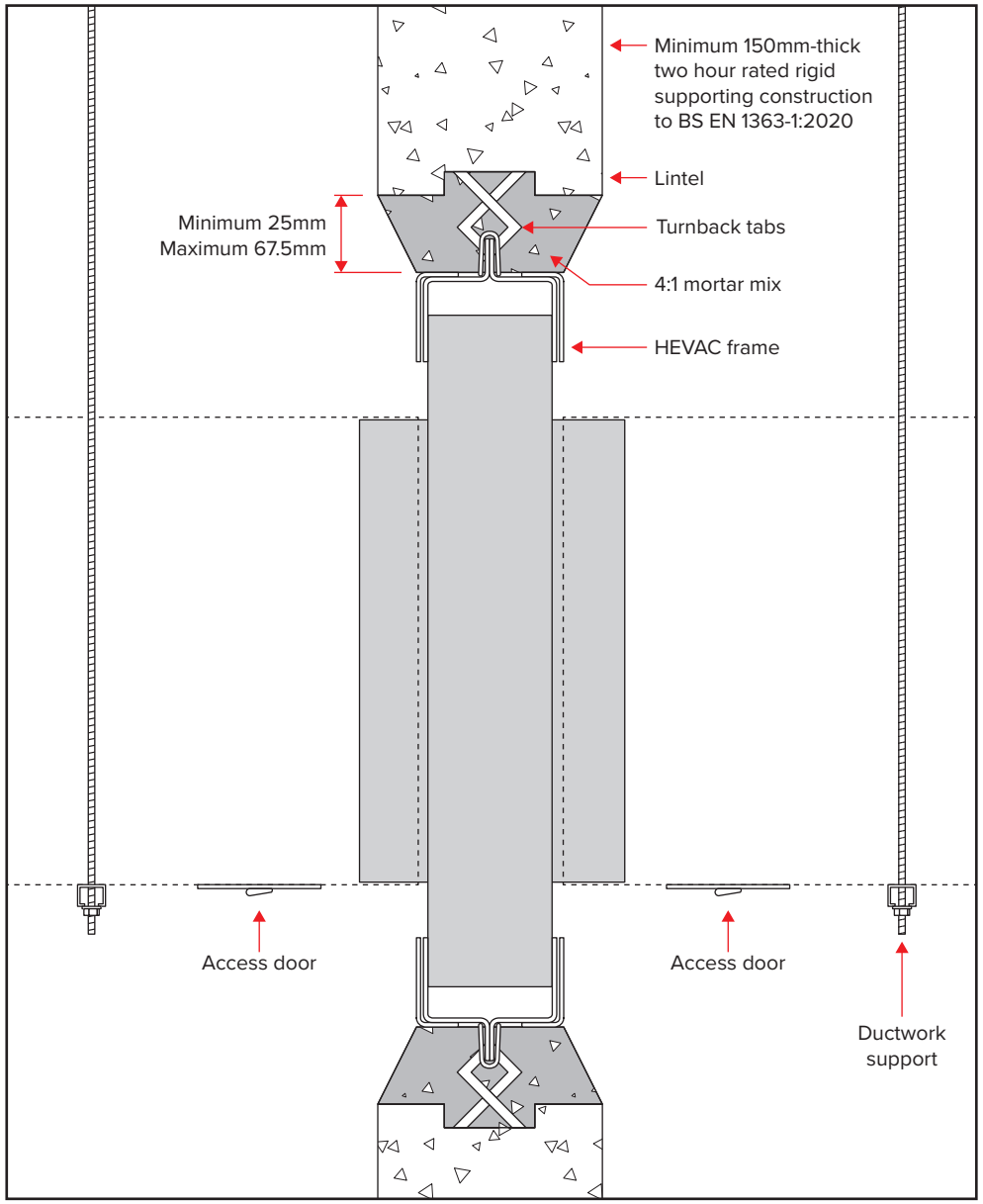

Preparation

1 Ensure that the damper is kept in a clean dry environment and that there is no damage to the damper.

2 Remove all the packaging and transit ties before installation.

3 Work out the opening size to be cut using the adjacent table.

Nom. duct width	Opening width min.	Opening width max.
100-1,000mm	Nom. duct +125mm	Nom. duct +210mm

Nom. duct height	Opening height min.	Opening height max.
100mm	Nom. duct +160mm	Nom. duct +210mm
101-300mm	Nom. duct +185mm	Nom. duct +235mm
301-525mm	Nom. duct +210mm	Nom. duct +260mm
526-700mm	Nom. duct +235mm	Nom. duct +285mm
701-925mm	Nom. duct +260mm	Nom. duct +310mm
926-1,000mm	Nom. duct +285mm	Nom. duct +335mm

NOTE – Dimensions above apply to rectangular, flat oval and circular spigots.

Installation sequence

4 In the opening, mark the positions for the turnback ties on the HEVAC frame.

5 Create 20mm deep pockets for the HEVAC tabs to be located in. The pockets should be approximately 30mm wide and 50mm long.

6 Offer up the damper into the opening and support from the bottom of the damper so that it sits centrally within the opening and has an even space on all four sides.

7 Bend the HEVAC tabs so that they lock into the pockets.

8 A 4:1 mortar mix can then be gradually applied between the wall and the damper, ensuring the mortar is only filled up to the HEVAC frame and not the damper spigots. This ensures the damper can move within the HEVAC frame.

9 The galvanised mild steel ductwork connecting to the damper spigots must overlap by up to 40mm, leaving minimum 10mm clearance for any duct expansion in a fire situation.

10 The galvanised mild steel ductwork connections must be sealed with an approved galvanised mild steel ductwork sealer and fixed with low resistance fixings such as aluminium rivets that will melt at high temperature allowing the duct to break away with affecting the integrity of the installation.

11 The connecting galvanised mild steel ductwork must be independently supported within one metre of the connections and have been installed in accordance with DW144.

12 For full adherence to DW145, access doors should be fitted on both sides of the damper for inspection and maintenance of the damper (DW145 clause 9.7).

13 When the damper installation has been completed, checks should be made to ensure the damper is secure and there is no movement, operation of the damper should be checked.

14 Complete DW145 Fire Damper Certificate.

PRODUCT **0160 WITH HEVAC FRAME (WALL)**	APPLICATION **RIGID SUPPORTING CONSTRUCTION**
CLASSIFICATION REPORT NO. **EFR-21-001846**	CLASSIFICATION **E120 (ve i ←→ o)**
TESTED INSTALLATION METHOD SHOWN. DIFFERING INSTALLATION METHODS TO THIS MUST BE APPROVED BY THE BUILDING CONTROL AUTHORITY (BCA) BEFORE PROCEEDING.	

FIRE – 0160 DRYWALL PLATE INSTALLATION FOR FLEXIBLE SUPPORTING CONSTRUCTION

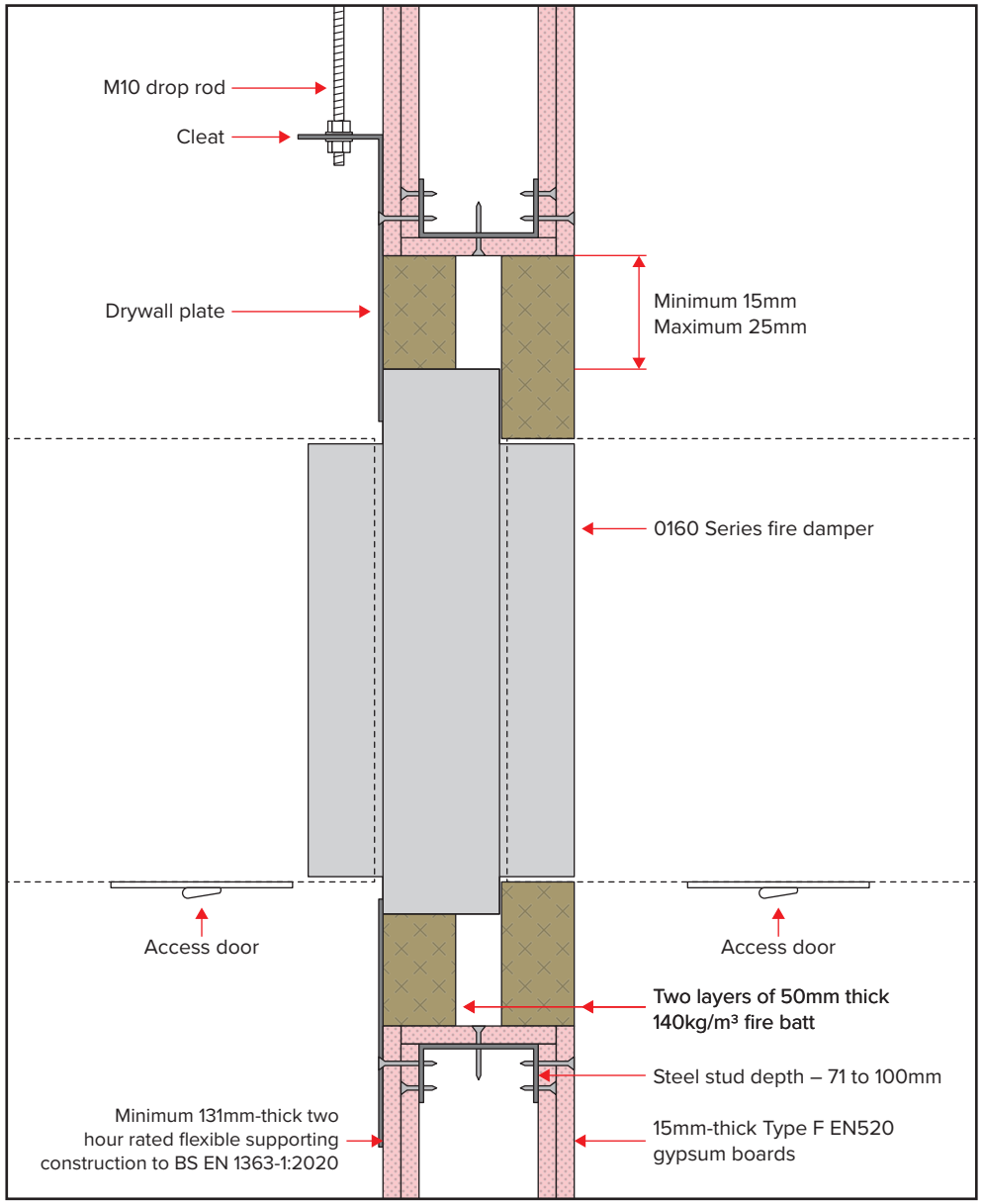

Preparation

1. Ensure that the damper is kept in a clean dry environment and that there is no damage to the damper.
2. Remove all the packaging and transit ties before installation.
3. Work out the opening size to be cut using the adjacent table.

Nominal duct width	Opening width ±5mm
100-1,000mm	Nominal duct +90mm

Nominal duct height	Opening height ±5mm
100mm	Nominal duct +90mm
101-300mm	Nominal duct +115mm
301-525mm	Nominal duct +140mm
526-700mm	Nominal duct +165mm
701-925mm	Nominal duct +190mm
926-1,000mm	Nominal duct +215mm

NOTE – Dimensions above apply to rectangular, flat oval and circular spigots.

Installation sequence

4. The drywall will consist of two layers of 15mm plasterboard each side of steel studwork with an optional mineral wool insulation. The opening will be a letterbox construction with overlapping layers of plasterboard with an opening clearance around the damper casing in line with the above table.
5. Two M10 drop rods per fire damper shall be fitted on one side of the drywall. These should be securely installed in line with the manufacturer's fixing instructions in a position to match the cleats on the dry wall damper frame.
6. The drop rods should have a nut screwed on for clamping the cleat from above.
7. The damper should be mounted centrally in the opening flush with the dry wall frame on the side with the drop rods, as detailed in the drawing. The drop rods are to slide through the holes in the cleats and a nut screwed on to take the support of the damper. The damper must then be levelled and when in the correct position the nut above the rail should be tightened against the cleat.
8. The drywall plate must be secured using M3.5mm drywall screws at a maximum of 150mm between centres, and all screws must penetrate the steel wall channel.
9. The galvanised mild steel ductwork connecting to the damper spigots must overlap by up to 40mm, leaving a minimum 10mm clearance for any duct expansion in a fire situation.
10. The galvanised mild steel ductwork connections must be sealed with an approved galvanised mild steel ductwork sealer and fixed with low resistance fixings such as aluminium rivets that will melt at high temperature allowing the duct to break away without effecting the integrity of the installation.
11. The connecting galvanised mild steel ductwork must be independently supported within one metre of the connections and have been installed in accordance with DW144.
12. The gap between the damper and the wall opening will need filling with two layers of 50mm thick 140kg/m³ fire batt cut to an interference fit and pushed in to place. All cut edges must be sealed with a firebatt sealant to BS EN 13501-2. A fire rated intumescent mastic (to BS EN 13501-2) shall be applied to each joint.
13. For full adherence to DW145, access doors should be fitted on both sides of the damper for inspection and maintenance of the damper (DW145 clause 9.7).
14. When the damper installation has been completed checks should be made to ensure the drop rods are secured to the cleats and there is no movement, operation of the damper should be checked.
15. Complete DW145 Fire Damper Certificate.

PRODUCT **0160 WITH DRYWALL PLATE (WALL)**	APPLICATION **FLEXIBLE SUPPORTING CONSTRUCTION**
CLASSIFICATION REPORT NO. **EFR-21-001846**	CLASSIFICATION **E120 (ve i ←→ o)**
TESTED INSTALLATION METHOD SHOWN. DIFFERING INSTALLATION METHODS TO THIS MUST BE APPROVED BY THE BUILDING CONTROL AUTHORITY (BCA) BEFORE PROCEEDING.	

FIRE – 0160 DRYWALL PLATE INSTALLATION FOR RIGID SUPPORTING CONSTRUCTION

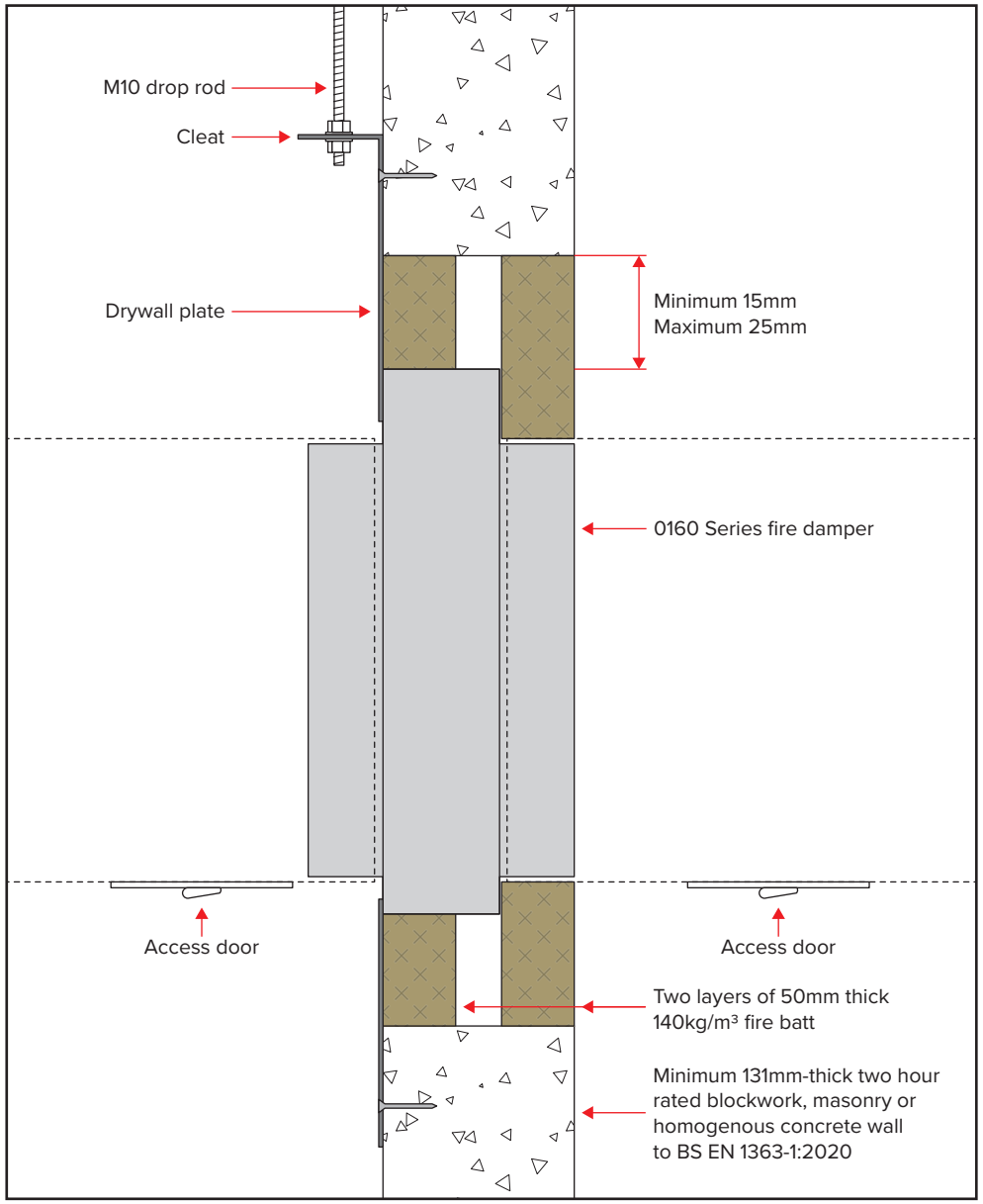

Preparation

1. Ensure that the damper is kept in a clean dry environment and that there is no damage to the damper.
2. Remove all the packaging and transit ties before installation.
3. Work out the opening size to be cut using the adjacent table.

Nominal duct width	Opening width ±5mm
100-1,000mm	Nominal duct +90mm

Nominal duct height	Opening height ±5mm
100mm	Nominal duct +90mm
101-300mm	Nominal duct +115mm
301-525mm	Nominal duct +140mm
526-700mm	Nominal duct +165mm
701-925mm	Nominal duct +190mm
926-1,000mm	Nominal duct +215mm

NOTE – Dimensions above apply to rectangular, flat oval and circular spigots.

Installation sequence

4. Two M10 drop rods per fire damper shall be fitted on one side of the drywall. These should be securely installed in line with the manufacturer's fixing instructions in a position to match the cleats on the dry wall damper frame.
5. The drop rods should have a nut screwed on for clamping the cleat from above.
6. The damper should be mounted centrally in the opening flush with the dry wall frame on the side with the drop rods, as detailed in the drawing. The drop rods are to slide through the holes in the cleats and a nut screwed on to take the support of the damper. The damper must then be levelled and when in the correct position the nut above the rail should be tightened against the cleat.
7. The drywall plate must be secured using appropriate masonry fixings (we recommend DEWALT DEWDFM1430035) at 150mm or less between centres.
8. The galvanised mild steel ductwork connecting to the damper spigots must overlap by up to 40mm, leaving a minimum 10mm clearance for any duct expansion in a fire situation.
9. The galvanised mild steel ductwork connections must be sealed with an approved galvanised mild steel ductwork sealer and fixed with low resistance fixings such as aluminium rivets that will melt at high temperature allowing the duct to break away without effecting the integrity of the installation.
10. The connecting galvanised mild steel ductwork must be independently supported within one metre of the connections and have been installed in accordance with DW144.
11. The gap between the damper and the wall opening will need filling with two layers of 50mm thick 140kg/m³ fire batt cut to an interference fit and pushed in to place. All cut edges must be sealed with a fire batt sealant to BS EN 13501-2. A fire rated intumescent mastic (to BS EN 13501-2) shall be applied to each joint.
12. For full adherence to DW145, access doors should be fitted on both sides of the damper for inspection and maintenance of the damper (DW145 clause 9.7).
13. When the damper installation has been completed checks should be made to ensure the drop rods are secured to the cleats and there is no movement, operation of the damper should be checked.
14. Complete DW145 Fire Damper Certificate.

PRODUCT **0160 WITH DRYWALL PLATE (WALL)**	APPLICATION **RIGID SUPPORTING CONSTRUCTION**
CLASSIFICATION REPORT NO. **EFR-21-001846**	CLASSIFICATION **E120 (ve i ←→ o)**
TESTED INSTALLATION METHOD SHOWN. DIFFERING INSTALLATION METHODS TO THIS MUST BE APPROVED BY THE BUILDING CONTROL AUTHORITY (BCA) BEFORE PROCEEDING.	

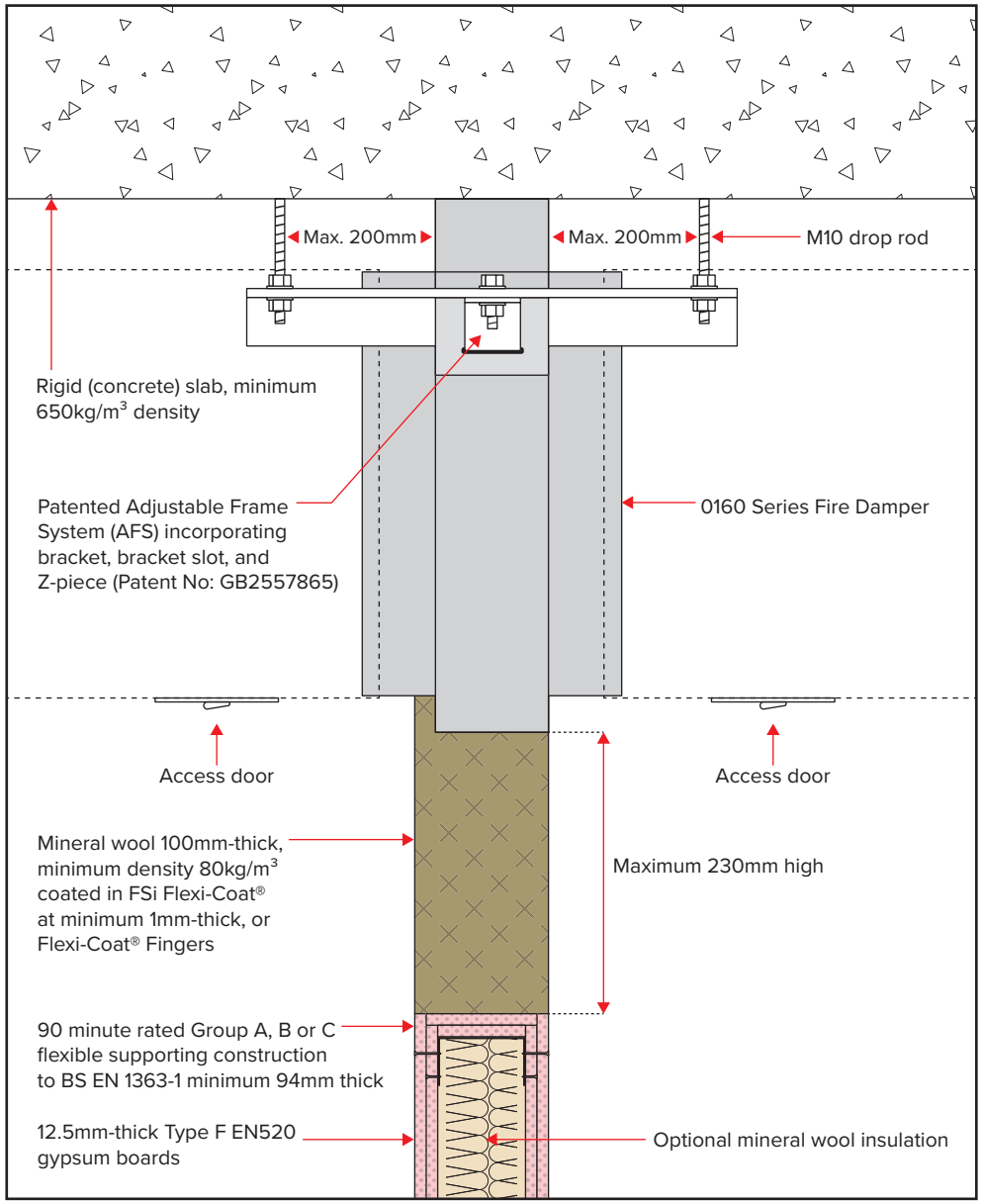

Preparation

1 Ensure that the damper is kept in a clean dry environment and that there is no damage to the damper.

2 Remove all the packaging and transit ties before installation.

3 Work out the opening size to be cut using the information on the next page.

Installation sequence

4 Two M10 drop rods per fire damper shall be fitted on both sides of the wall.

5 The drop rods should have a nut screwed on for clamping the rail from above.

6 Slide the AFS rails on each side of the damper into the brackets and insert the "Z" piece into the bracket slot pushing it up against the underside of the rail. Insert the 8mm bolt from above into the slot through the "Z" piece fitting the nut until tight to secure the rail.

7 The damper must be mounted flush against the slab. The damper is ordinarily centralised to provide an even gap either side*. The drop rods are to slide through the slots in the rail and a nut screwed on to take the support of the damper rail. The damper must then be levelled and when in the correct position the nut above the rail should be tightened against the rail. Use an intumescent sealant (such as FSi Pyrocoustic fire resistant sealant) to seal between the top of the damper and slab above.

8 The galvanised mild steel ductwork connecting to the damper spigots must overlap by up to 40mm, leaving a minimum 10mm clearance for any duct expansion in a fire situation.

9 The galvanised mild steel ductwork connections must be sealed with an approved galvanised mild steel ductwork sealer and fixed with low resistance fixings such as aluminium rivets that will melt at high temperature allowing the duct to break away without effecting the integrity of the installation.

10 The connecting galvanised mild steel ductwork must be independently supported in accordance with DW144, we recommend the first duct support is within one metre of the connections.

11 The gap between the damper and the wall opening will need filling with one layer of 100mm thick FSi FlexiCoat® Fingers, please see the next page for correctly sizing the opening and how to install the FlexiCoat® Fingers.

12 For full adherence to DW145, access doors should be fitted on both sides of the damper for inspection and maintenance of the damper (DW145 clause 9.7).

13 When the damper installation has been completed checks should be made to ensure the AFS rails are secure and there is no movement, operation of the damper should be checked.

14 Complete DW145 Fire Damper Certificate.

IMPORTANT – Please also refer to the following page (18) for opening sizes and further information.

*Where an even gap is not possible, the gap each side must be no more than 230mm wide, and must be wide enough for the deflection required – see following page (18) for guidance.

PRODUCT **0160 WITH AFS RAIL**	APPLICATION **90 MINUTE FLEXIBLE, WITH FLEXICOAT FOR DEFLECTION**
CLASSIFICATION REPORT NO. **EFR-21-001846_RC**	CLASSIFICATION **E90 (ve i ←→ o) E120 (ve i ← o)**
TESTED INSTALLATION METHOD SHOWN. DIFFERING INSTALLATION METHODS TO THIS MUST BE APPROVED BY THE BUILDING CONTROL AUTHORITY (BCA) BEFORE PROCEEDING.	

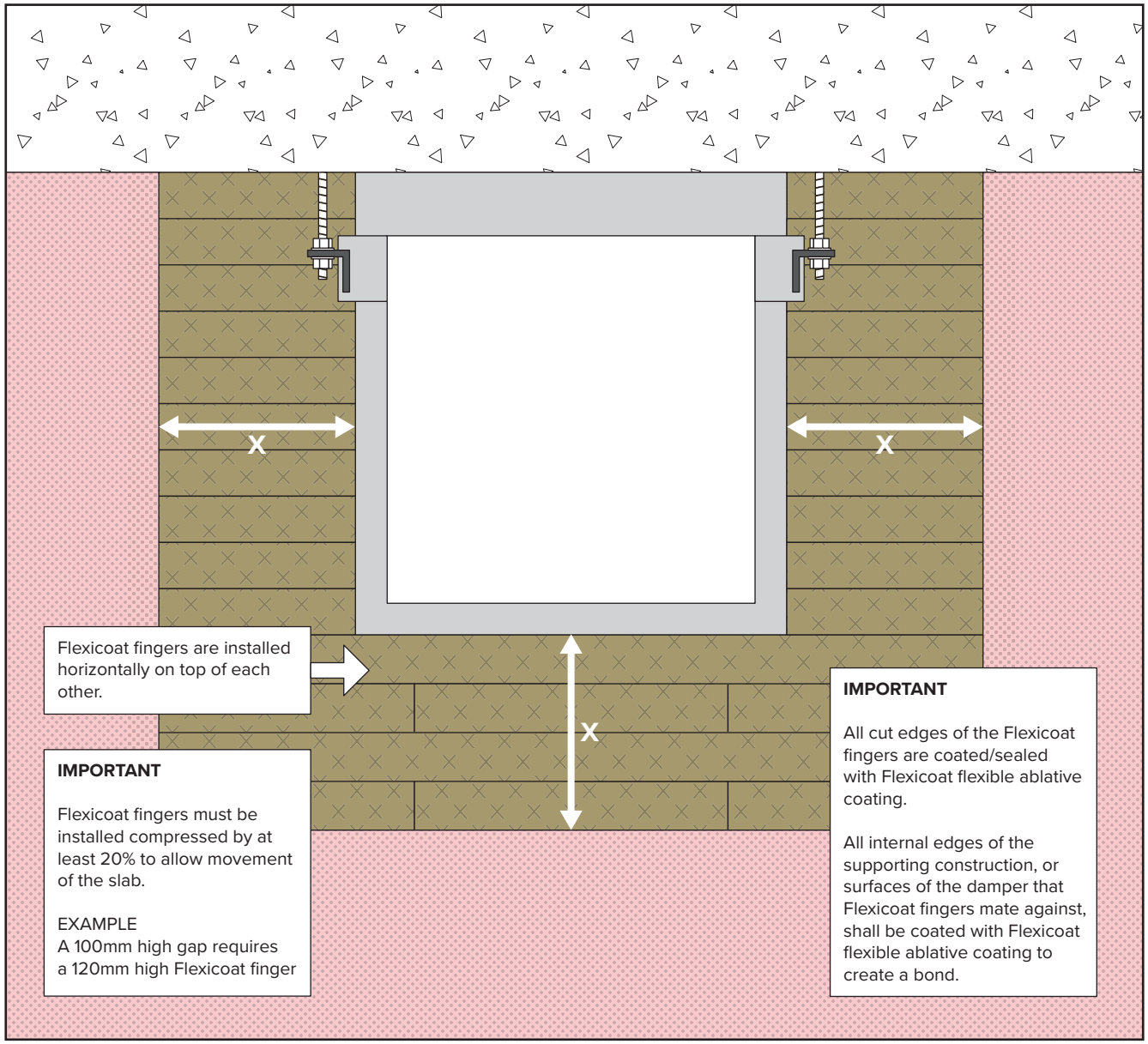

Structural opening

The permissible deflection is ±25% of the installed width/height of the Flexicoat penetration seal around the damper. The table below table gives some common sizes, but the maximum width/height would be 230mm, providing deflection movement of ±57.5mm.

Slab deflection allowance	Height/width of opening gap around damper (X)
±15mm	60mm or greater
±20mm	80mm or greater
±25mm	100mm or greater
±30mm	120mm or greater
±35mm	140mm or greater
±40mm	160mm or greater
±45mm	180mm or greater
±50mm	200mm or greater
±55mm	220mm or greater

Nominal duct width	Min. opening width	Max. opening width
100-1,000mm	Nominal duct + 50 + (2 × X)	Nominal duct + 510

Nominal duct height	Min. opening height	Max. opening height
100mm	Nom. duct + 50 + X	Nom. duct + 280
101-300mm	Nom. duct + 75 + X	Nom. duct + 280
301-525mm	Nom. duct + 100 + X	Nom. duct + 280
526-700mm	Nom. duct + 125 + X	Nom. duct + 280
701-925mm	Nom. duct + 150 + X	Nom. duct + 280
926-1,000mm	Nom. duct + 175 + X	Nom. duct + 280

PRODUCT **0160 WITH AFS RAIL**	APPLICATION **90 MINUTE FLEXIBLE, WITH FLEXICOAT FOR DEFLECTION**
CLASSIFICATION REPORT NO. **EFR-21-001846_RC**	CLASSIFICATION **E90 (ve i ←→ o) E120 (ve i ← o)**
TESTED INSTALLATION METHOD SHOWN. DIFFERING INSTALLATION METHODS TO THIS MUST BE APPROVED BY THE BUILDING CONTROL AUTHORITY (BCA) BEFORE PROCEEDING.	

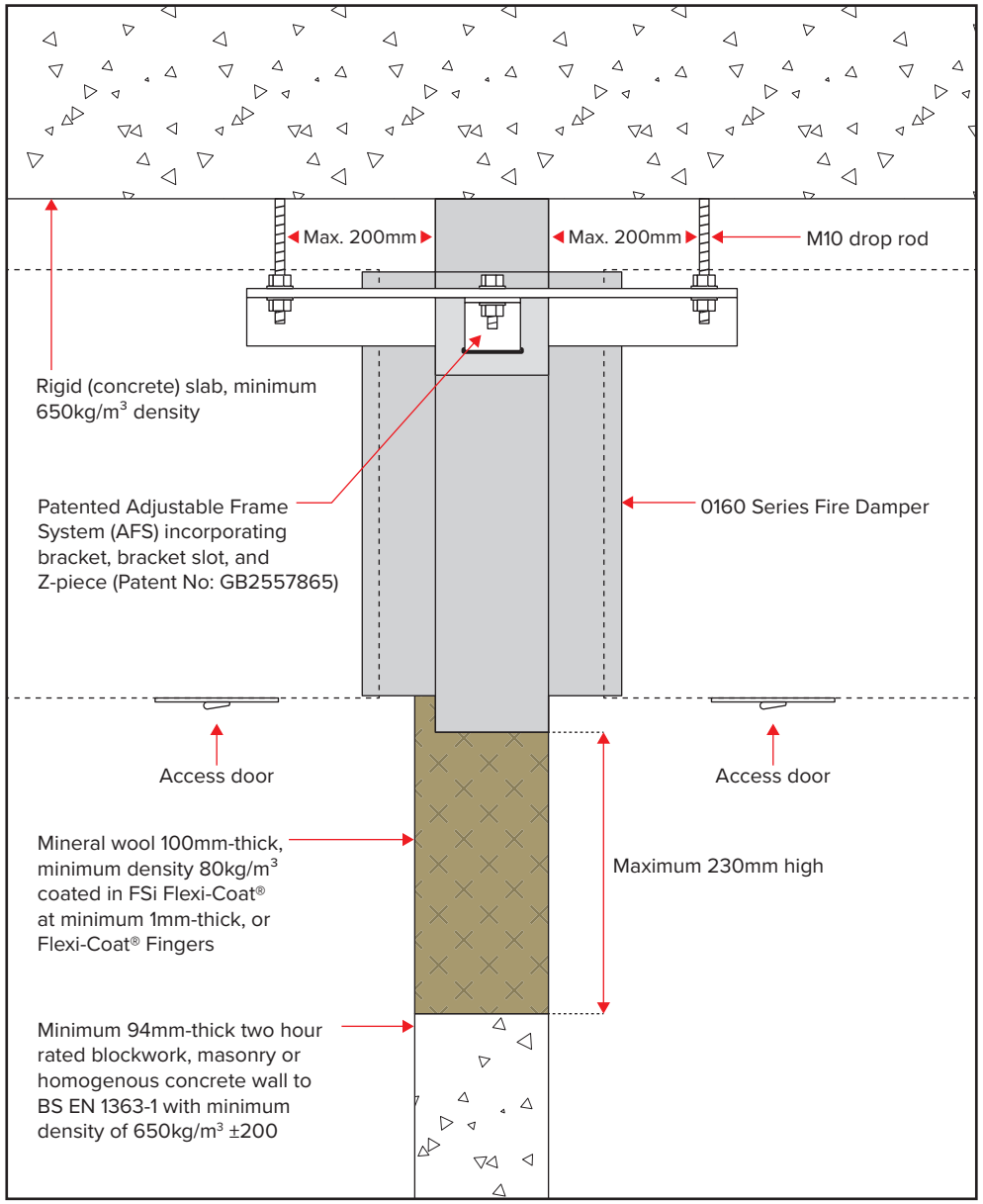

Preparation

1 Ensure that the damper is kept in a clean dry environment and that there is no damage to the damper.

2 Remove all the packaging and transit ties before installation.

3 Work out the opening size to be cut using the information on the next page.

Installation sequence

4 Two M10 drop rods per fire damper shall be fitted on both sides of the wall.

5 The drop rods should have a nut screwed on for clamping the rail from above.

6 Slide the AFS rails on each side of the damper into the brackets and insert the "Z" piece into the bracket slot pushing it up against the underside of the rail. Insert the 8mm bolt from above into the slot through the "Z" piece fitting the nut until tight to secure the rail.

7 The damper must be mounted flush against the slab. The damper is ordinarily centralised to provide an even gap either side*. The drop rods are to slide through the slots in the rail and a nut screwed on to take the support of the damper rail. The damper must then be levelled and when in the correct position the nut above the rail should be tightened against the rail. Use an intumescent sealant (such as FSi Pyrocoustic fire resistant sealant) to seal between the top of the damper and slab above.

8 The galvanised mild steel ductwork connecting to the damper spigots must overlap by up to 40mm, leaving a minimum 10mm clearance for any duct expansion in a fire situation.

9 The galvanised mild steel ductwork connections must be sealed with an approved galvanised mild steel ductwork sealer and fixed with low resistance fixings such as aluminium rivets that will melt at high temperature allowing the duct to break away without effecting the integrity of the installation.

10 The connecting galvanised mild steel ductwork must be independently supported in accordance with DW144, we recommend the first duct support is within one metre of the connections.

11 The gap between the damper and the wall opening will need filling with one layer of 100mm thick FSi FlexiCoat® Fingers, please see the next page for correctly sizing the opening and how to install the FlexiCoat® Fingers.

12 For full adherence to DW145, access doors should be fitted on both sides of the damper for inspection and maintenance of the damper (DW145 clause 9.7).

13 When the damper installation has been completed checks should be made to ensure the AFS rails are secure and there is no movement, operation of the damper should be checked.

14 Complete DW145 Fire Damper Certificate.

IMPORTANT – Please also refer to the following page (20) for opening sizes and further information.

*Where an even gap is not possible, the gap each side must be no more than 230mm wide, and must be wide enough for the deflection required – see following page (20) for guidance.

PRODUCT **0160 WITH AFS RAIL**	APPLICATION **90 MINUTE RIGID, WITH FLEXICOAT FOR DEFLECTION**
CLASSIFICATION REPORT NO. **EFR-21-001846_RC**	CLASSIFICATION **E90 (ve i ←→ o) E120 (ve i ← o)**
TESTED INSTALLATION METHOD SHOWN. DIFFERING INSTALLATION METHODS TO THIS MUST BE APPROVED BY THE BUILDING CONTROL AUTHORITY (BCA) BEFORE PROCEEDING.	

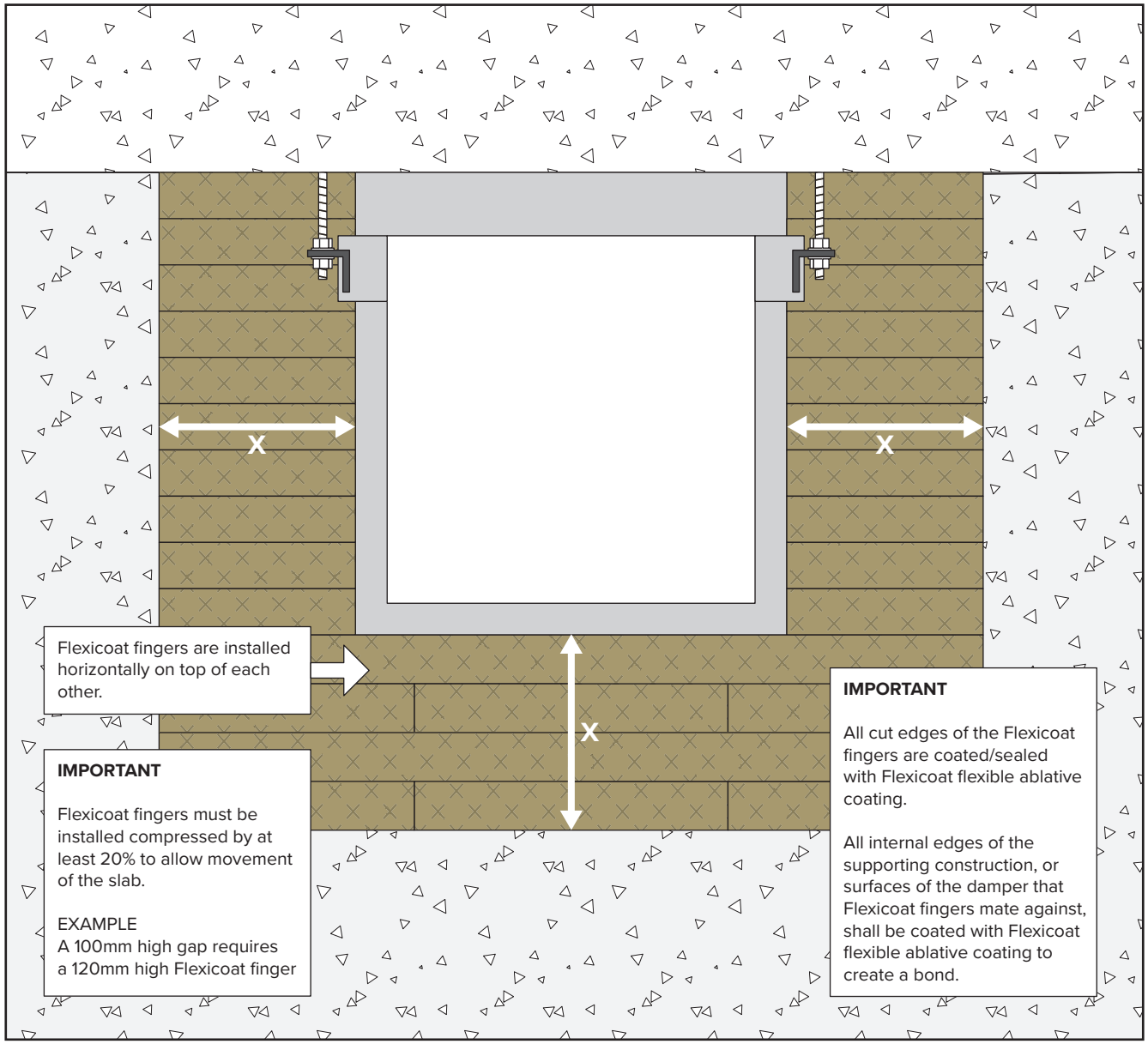

Structural opening

The permissible deflection is ±25% of the installed width/height of the Flexicoat penetration seal around the damper. The table below table gives some common sizes, but the maximum width/height would be 230mm, providing deflection movement of ±57.5mm.

Slab deflection allowance	Height/width of opening gap around damper (X)
±15mm	60mm or greater
±20mm	80mm or greater
±25mm	100mm or greater
±30mm	120mm or greater
±35mm	140mm or greater
±40mm	160mm or greater
±45mm	180mm or greater
±50mm	200mm or greater
±55mm	220mm or greater

Nominal duct width	Min. opening width	Max. opening width
100-1,000mm	Nominal duct + 50 + (2 × X)	Nominal duct + 510

Nominal duct height	Min. opening height	Max. opening height
100mm	Nom. duct + 50 + X	Nom. duct + 280
101-300mm	Nom. duct + 75 + X	Nom. duct + 280
301-525mm	Nom. duct + 100 + X	Nom. duct + 280
526-700mm	Nom. duct + 125 + X	Nom. duct + 280
701-925mm	Nom. duct + 150 + X	Nom. duct + 280
926-1,000mm	Nom. duct + 175 + X	Nom. duct + 280

PRODUCT **0160 WITH AFS RAIL**	APPLICATION **90 MINUTE RIGID, WITH FLEXICOAT FOR DEFLECTION**
CLASSIFICATION REPORT NO. **EFR-21-001846_RC**	CLASSIFICATION **E90 (ve i ←→ o) E120 (ve i ← o)**
TESTED INSTALLATION METHOD SHOWN. DIFFERING INSTALLATION METHODS TO THIS MUST BE APPROVED BY THE BUILDING CONTROL AUTHORITY (BCA) BEFORE PROCEEDING.	

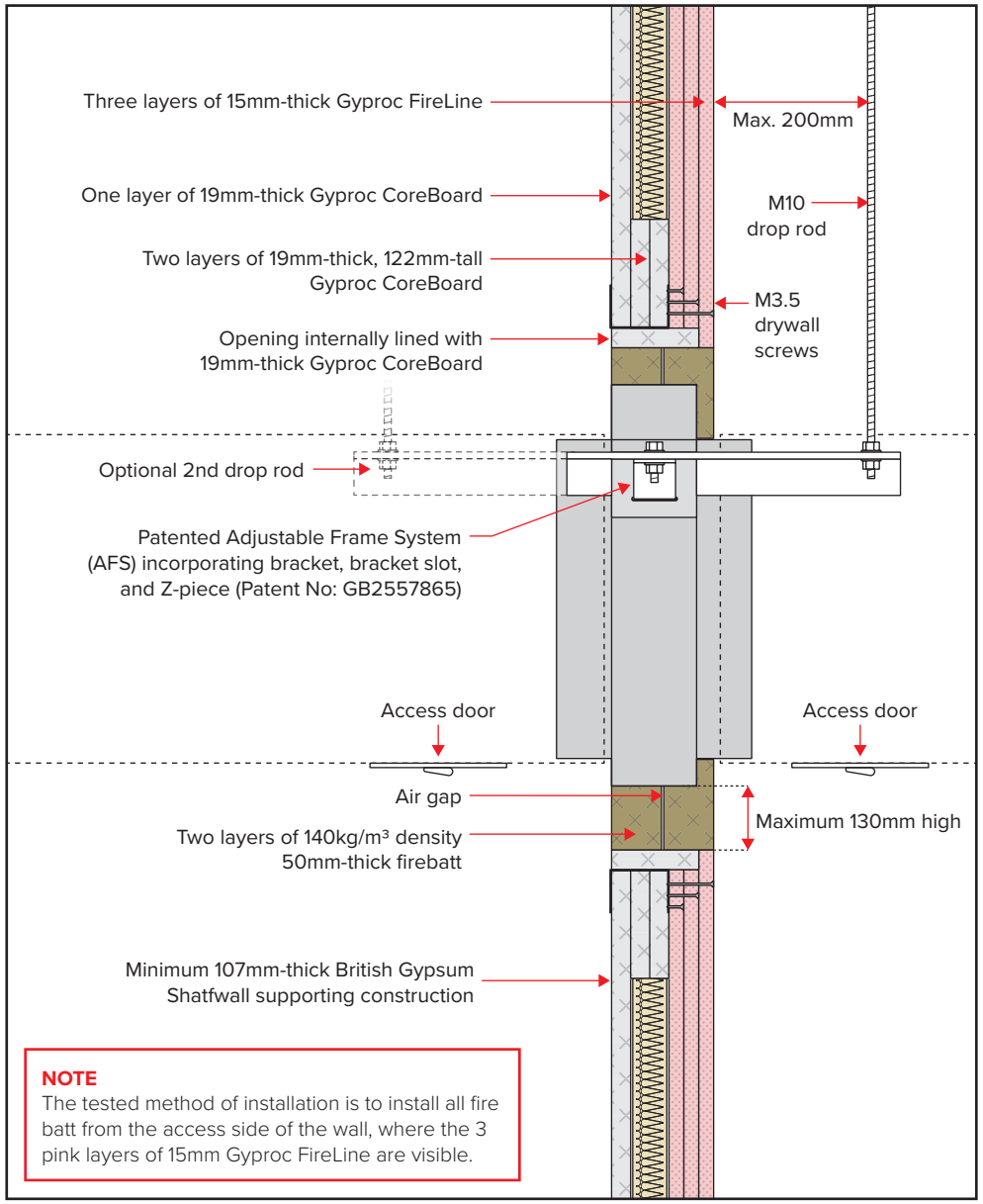

NOTE
The tested method of installation is to install all fire batt from the access side of the wall, where the 3 pink layers of 15mm Gyproc FireLine are visible.

Preparation

1. Ensure that the damper is kept in a clean dry environment and that there is no damage to the damper.
2. Remove all the packaging and transit ties before installation.
3. Work out the opening size to be cut using the adjacent table.

Nom. duct width	Opening width min.	Opening width max.
100-1,000mm	Nom. duct +194mm	Nom. duct +350mm

Nom. duct height	Opening height min.	Opening height max.
100mm	Nom. duct +100mm	Nom. duct +350mm
101-300mm	Nom. duct +125mm	Nom. duct +375mm
301-525mm	Nom. duct +150mm	Nom. duct +400mm
526-700mm	Nom. duct +175mm	Nom. duct +425mm
701-925mm	Nom. duct +200mm	Nom. duct +450mm
926-1,000mm	Nom. duct +225mm	Nom. duct +475mm

NOTE – Dimensions above apply to rectangular, flat oval and circular spigots. Please also see guidance later in this document regarding AFS dampers installed in fire batt.

Installation sequence

4. A minimum 107mm thick two hour British Gypsum Shaftwall must be erected to the manufacturer's instructions. The tested wall is British Gypsum ref A306035 (A) (EN), which by Direct Fields of Application allows any variation of wall A306036 (A) (EN) or A306044 (A) (EN). The opening will be a letterbox construction with a single 19mm thick layer of plasterboard lining it.
5. Two M10 drop rods per fire damper shaft shall be fitted on one side of the drywall. These should be securely installed in line with the manufacturer's fixing instructions in a position to match the AFS rail.
6. The drop rods should have a nut screwed on for clamping the rail form above, but this can be loosened after installation to allow the rods to pass through the rails in the event of slab deflection.
7. Slide the AFS rails on each side of the damper into the brackets and insert the 'Z' piece into the bracket slot pushing it up against the underside of the rail. Insert the 8mm bolt from above into the slot through the 'Z' piece fitting the nut until tight to secure the rail.
8. The damper should be mounted in the opening flush with the wall on the side with the 19mm CoreBoard, as detailed in the drawing. The drop rods are to slide through the slots in the rail and a nut screwed on to take the support of the damper rail. The damper must then be levelled and when in the correct position the nut above the rail should be tightened against the rail.
9. The galvanised mild steel ductwork connecting to the damper spigots must overlap by up to 40mm, leaving a minimum 10mm clearance for any duct expansion in a fire situation.
10. The galvanised mild steel ductwork connections must be sealed with an approved galvanised mild steel ductwork sealer and fixed with low resistance fixings such as aluminium rivets that will melt at high temperature allowing the duct to break away without affecting the integrity of the installation.
11. The connecting galvanised mild steel ductwork must be independently supported in accordance with DW144, we recommend the first duct support is within one metre of the connections.
12. The gap between the damper and the wall opening will need filling with two layers of 50mm thick 140kg/m³ fire batt cut to an interference fit and pushed into place. All cut edges must be sealed with a fire batt sealant to BS EN 13501-2. A fire rated intumescent mastic to BS EN 13501-2 shall be applied to each joint. The fire batt installation can all be carried out from one side of the wall.
13. For full adherence to DW145, access doors should be fitted on both sides of the damper for inspection and maintenance of the damper (DW145 clause 9.7).
14. When the damper installation has been completed checks should be made to ensure the AFS rails are secure and there is no movement, operation of the damper should be checked.
15. Complete DW144 Fire Damper Certificate.

PRODUCT **0160 WITH AFS RAIL**	APPLICATION **107MM BRITISH GYPSUM SHAFTWALL TWO HOURS**
CLASSIFICATION REPORT NO. **EFR-21-001846_RC**	CLASSIFICATION **E120 (ve i ← o)**
TESTED INSTALLATION METHOD SHOWN. DIFFERING INSTALLATION METHODS TO THIS MUST BE APPROVED BY THE BUILDING CONTROL AUTHORITY (BCA) BEFORE PROCEEDING.	

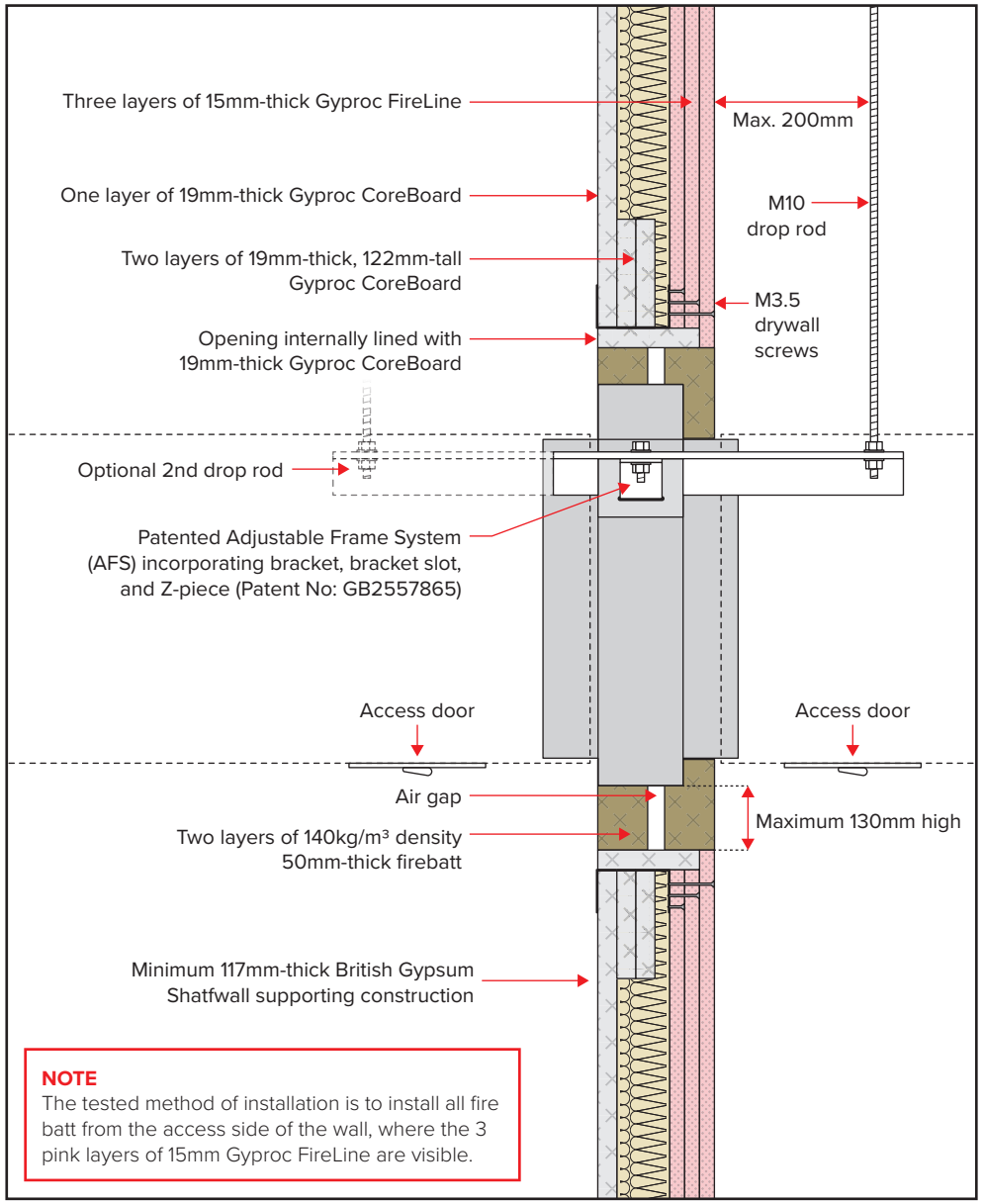

NOTE
The tested method of installation is to install all fire batt from the access side of the wall, where the 3 pink layers of 15mm Gyproc FireLine are visible.

Preparation

1. Ensure that the damper is kept in a clean dry environment and that there is no damage to the damper.
2. Remove all the packaging and transit ties before installation.
3. Work out the opening size to be cut using the adjacent table.

Nom. duct width	Opening width min.	Opening width max.
100-1,000mm	Nom. duct +194mm	Nom. duct +350mm

Nom. duct height	Opening height min.	Opening height max.
100mm	Nom. duct +100mm	Nom. duct +350mm
101-300mm	Nom. duct +125mm	Nom. duct +375mm
301-525mm	Nom. duct +150mm	Nom. duct +400mm
526-700mm	Nom. duct +175mm	Nom. duct +425mm
701-925mm	Nom. duct +200mm	Nom. duct +450mm
926-1,000mm	Nom. duct +225mm	Nom. duct +475mm

NOTE – Dimensions above apply to rectangular, flat oval and circular spigots. Please also see guidance later in this document regarding AFS dampers installed in fire batt.

Installation sequence

4. A minimum 117mm thick two hour British Gypsum Shaftwall must be erected to the manufacturer's instructions. The tested wall is British Gypsum ref A306044 (A) (EN), which by Direct Fields of Application allows any variation of wall A306036 (A) (EN). The opening will be a letterbox construction with a single 19mm thick layer of plasterboard lining it.
5. Two M10 drop rods per fire damper shaft shall be fitted on one side of the drywall. These should be securely installed in line with the manufacturer's fixing instructions in a position to match the AFS rail.
6. The drop rods should have a nut screwed on for clamping the rail form above, but this can be loosened after installation to allow the rods to pass through the rails in the event of slab deflection.
7. Slide the AFS rails on each side of the damper into the brackets and insert the 'Z' piece into the bracket slot pushing it up against the underside of the rail. Insert the 8mm bolt from above into the slot through the 'Z' piece fitting the nut until tight to secure the rail.
8. The damper should be mounted in the opening flush with the wall on the side with the 19mm CoreBoard, as detailed in the drawing. The drop rods are to slide through the slots in the rail and a nut screwed on to take the support of the damper rail. The damper must then be levelled and when in the correct position the nut above the rail should be tightened against the rail.
9. The galvanised mild steel ductwork connecting to the damper spigots must overlap by up to 40mm, leaving a minimum 10mm clearance for any duct expansion in a fire situation.
10. The galvanised mild steel ductwork connections must be sealed with an approved galvanised mild steel ductwork sealer and fixed with low resistance fixings such as aluminium rivets that will melt at high temperature allowing the duct to break away without affecting the integrity of the installation.
11. The connecting galvanised mild steel ductwork must be independently supported in accordance with DW144, we recommend the first duct support is within one metre of the connections.
12. The gap between the damper and the wall opening will need filling with two layers of 50mm thick 140kg/m³ fire batt cut to an interference fit and pushed into place. All cut edges must be sealed with a fire batt sealant to BS EN 13501-2. A fire rated intumescent mastic to BS EN 13501-2 shall be applied to each joint. The fire batt installation can all be carried out from one side of the wall.
13. For full adherence to DW145, access doors should be fitted on both sides of the damper for inspection and maintenance of the damper (DW145 clause 9.7).
14. When the damper installation has been completed checks should be made to ensure the AFS rails are secure and there is no movement, operation of the damper should be checked.
15. Complete DW144 Fire Damper Certificate.

PRODUCT **0160 WITH AFS RAIL**	APPLICATION **117MM BRITISH GYPSUM SHAFTWALL TWO HOURS**
CLASSIFICATION REPORT NO. **EFR-21-001846_RC**	CLASSIFICATION **E120 (ve i ←→ o)**
TESTED INSTALLATION METHOD SHOWN. DIFFERING INSTALLATION METHODS TO THIS MUST BE APPROVED BY THE BUILDING CONTROL AUTHORITY (BCA) BEFORE PROCEEDING.	

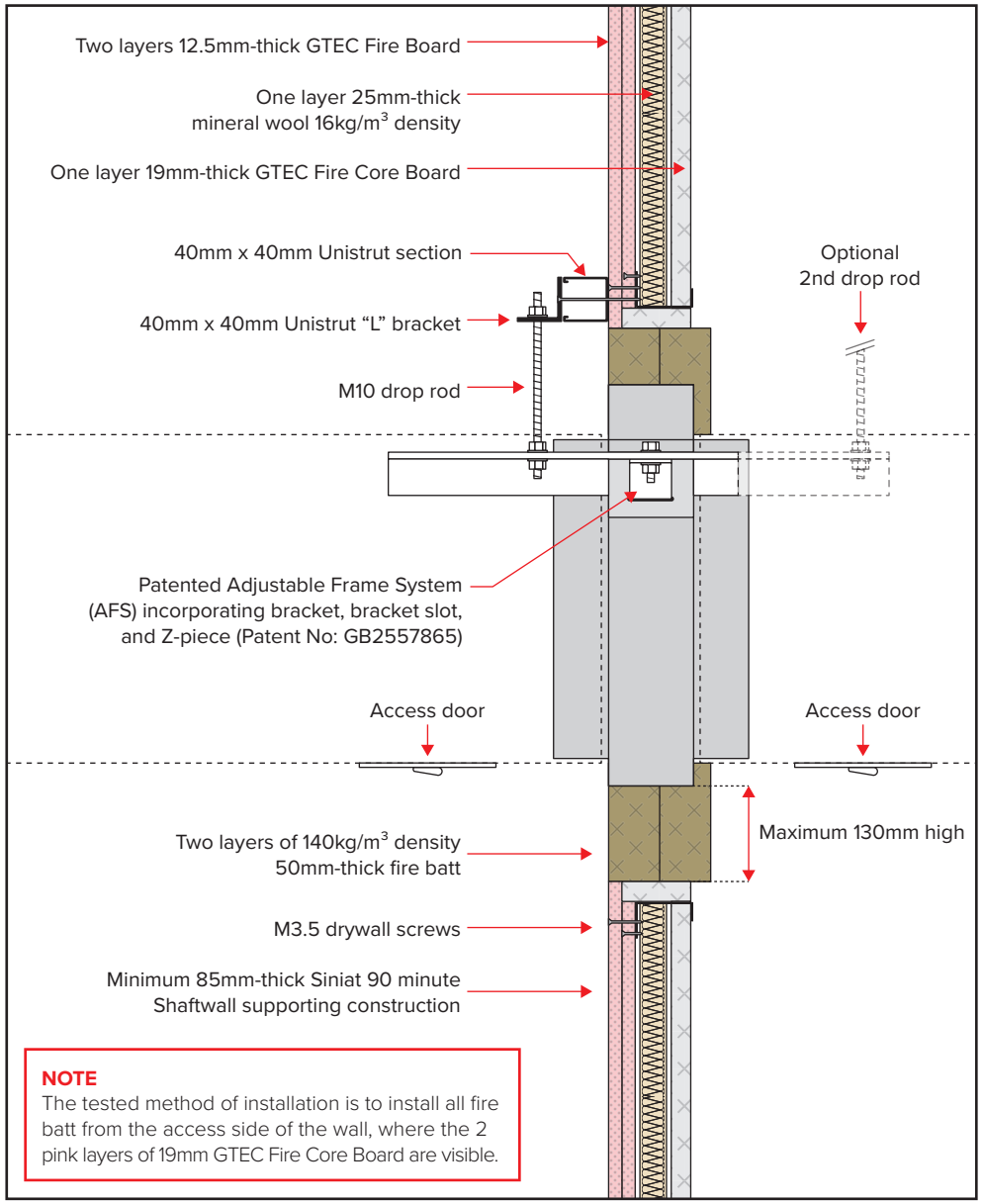

NOTE
The tested method of installation is to install all fire batt from the access side of the wall, where the 2 pink layers of 19mm GTEC Fire Core Board are visible.

Preparation

1. Ensure that the damper is kept in a clean dry environment and that there is no damage to the damper.
2. Remove all the packaging and transit ties before installation.
3. Work out the opening size to be cut using the adjacent table.

Nom. duct width	Opening width min.	Opening width max.
100-1,000mm	Nom. duct +194mm	Nom. duct +350mm

Nom. duct height	Opening height min.	Opening height max.
100mm	Nom. duct +100mm	Nom. duct +350mm
101-300mm	Nom. duct +125mm	Nom. duct +375mm
301-525mm	Nom. duct +150mm	Nom. duct +400mm
526-700mm	Nom. duct +175mm	Nom. duct +425mm
701-925mm	Nom. duct +200mm	Nom. duct +450mm
926-1,000mm	Nom. duct +225mm	Nom. duct +475mm

NOTE – Dimensions above apply to rectangular, flat oval and circular spigots. Please also see guidance later in this document regarding AFS dampers installed in fire batt.

Installation sequence

4. A minimum 85mm thick 90 minute Siniat Shaftwall must be erected to the manufacturer's instructions (the tested wall is Siniat IWS-221 RNS 104 MOD. The opening will be a letterbox construction with a single layer of plasterboard lining it, which is covered over by the outer 12.5mm thick board on the visible side of the wall.
5. Two M10 drop rods per fire damper shaft shall be fitted on one side of the drywall. These should be secured to a 40x40mm Unistrut section attached to the wall as shown. The Unistrut is fixed to the wall using a penny washer and M4.5mm drywall screw; the drywall screw must penetrate the steel channel beneath the board.
6. The drop rods should have a nut screwed on for clamping the rail form above.
7. Slide the AFS rails on each side of the damper into the brackets and insert the 'Z' piece into the bracket slot pushing it up against the underside of the rail. Insert the 8mm bolt from above into the slot through the 'Z' piece fitting the nut until tight to secure the rail.
8. The damper should be mounted in the opening flush with the wall on the side with the drop rods, as detailed in the drawing. The drop rods are to slide through the slots in the rail and a nut screwed on to take the support of the damper rail. The damper must then be levelled and when in the correct position the nut above the rail should be tightened against the rail.
9. The galvanised mild steel ductwork connecting to the damper spigots must overlap by up to 40mm, leaving a minimum 10mm clearance for any duct expansion in a fire situation.
10. The galvanised mild steel ductwork connections must be sealed with an approved galvanised mild steel ductwork sealer and fixed with low resistance fixings such as aluminium rivets that will melt at high temperature allowing the duct to break away without affecting the integrity of the installation.
11. The connecting galvanised mild steel ductwork must be independently supported in accordance with DW144, we recommend the first duct support is within one metre of the connections.
12. The gap between the damper and the wall opening will need filling with two layers of 50mm thick 140kg/m³ fire batt cut to an interference fit and pushed into place. All cut edges must be sealed with a fire batt sealant to BS EN 13501-2. A fire rated intumescent mastic to BS EN 13501-2 shall be applied to each joint. The fire batt installation can all be carried out from one side of the wall.
13. For full adherence to DW145, access doors should be fitted on both sides of the damper for inspection and maintenance of the damper (DW145 clause 9.7).
14. When the damper installation has been completed checks should be made to ensure the AFS rails are secure and there is no movement, operation of the damper should be checked.
15. Complete DW144 Fire Damper Certificate.

PRODUCT **0160 WITH AFS RAIL**	APPLICATION **90 MINUTE SINIAT SHAFTWALL**
CLASSIFICATION REPORT NO. **EFR-21-001846_RC**	CLASSIFICATION **E90 (ve i ←→ o)**
TESTED INSTALLATION METHOD SHOWN. DIFFERING INSTALLATION METHODS TO THIS MUST BE APPROVED BY THE BUILDING CONTROL AUTHORITY (BCA) BEFORE PROCEEDING.	

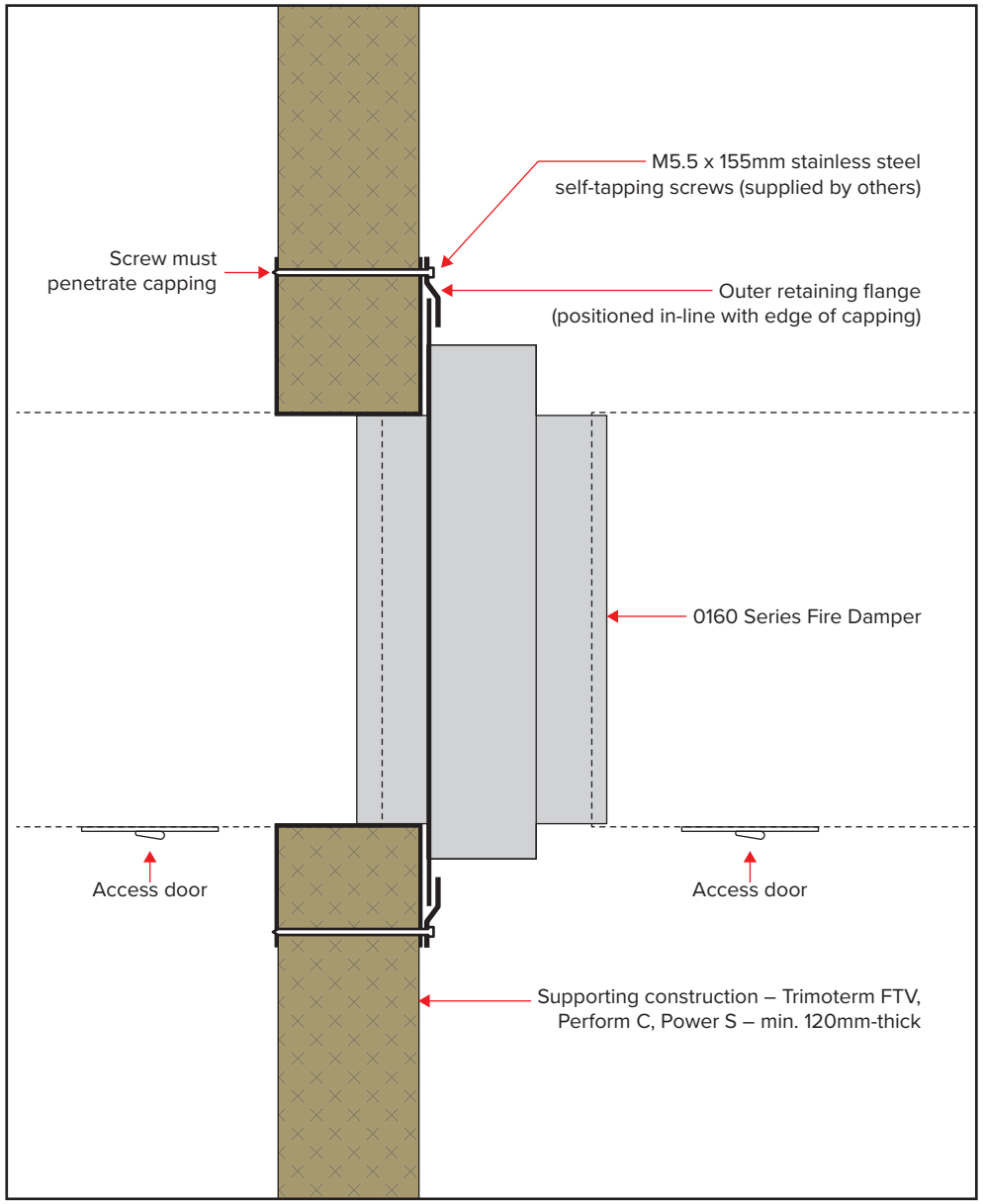

Preparation

1. Ensure that the damper is kept in a clean dry environment and that there is no damage to the damper.
2. Remove all the packaging and transit ties before installation.
3. Work out the opening size to be cut using the adjacent table.

Nom. duct size	Opening minimum height / width	Opening maximum height / width
200 x 200mm and above	Nom. duct +44mm	Nom. duct +64mm
200 x 200mm and below	240 x 240mm	260 x 260mm
Circular duct over 175mm	Nom. duct +65mm	Nom. duct +85mm
Circular duct under 175mm	240 x 240mm	260 x 260mm

Installation sequence

4. Erect the Trimoterm wall to the manufacturer's instructions.
5. Cut the opening for the damper, making the opening 4mm larger than those shown in the table above. This is to allow for the thickness of the wall opening capping.
6. Install the galvanized mild steel capping around the inside edge of the opening.
7. Offer the damper up against the opening, pressing the damper flange tight against the wall face.
8. The damper will require support for the remainder of the installation.
9. Secure the damper into place by fitting the outer flange sections (supplied with damper). Use a ceramic sealant rated at 1,250 °C (such as Astroflame Astro INTU Mastic) between all mating faces of the wall, damper flange, and outer flange sections. The outer flange sections are secured by M5.5x155mm stainless steel self tapping screws at maximum of 150mm centres.
10. For full adherence to DW145, access doors should be fitted on both sides of the damper for inspection and maintenance of the damper (DW145 clause 9.7).
11. When the damper installation has been completed checks should be made to ensure there is no movement of the damper.
12. Complete DW145 Fire Damper Checklist.

Capping dimensions – From 1.6mm thick galvanised mild steel

Sides and Bottom

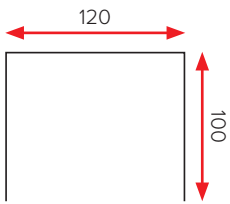

Top only

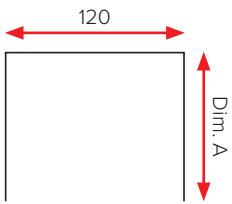

Nominal duct height (mm)	Dimension A (mm)
100	105
101-300	130
301-525	155
526-700	180
701-925	205
926-1,000	230

PRODUCT **0160 IN TWO HOUR TRIMOTERM WALL**	APPLICATION **TRIMOTERM WALL**
CLASSIFICATION REPORT NO. **EFR-21-001846_RC**	CLASSIFICATION **E120 (ve i ←→ o)**
TESTED INSTALLATION METHOD SHOWN. DIFFERING INSTALLATION METHODS TO THIS MUST BE APPROVED BY THE BUILDING CONTROL AUTHORITY (BCA) BEFORE PROCEEDING.	

1. Prepare wall opening

Cut opening in Trimoterm panel to appropriate size.

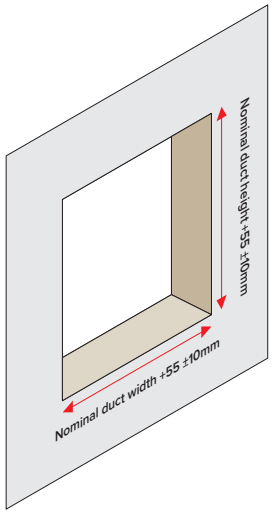

2. Place capping in opening, and secure

Capping supplied by others with wall. Secure capping to wall with Pro Point self tapping screws (supplied by others).

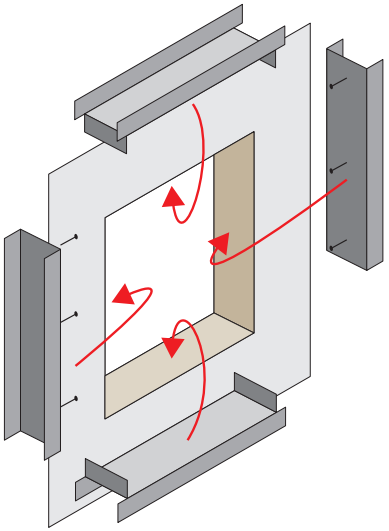

3. Offer damper up to capped opening

Apply Astroflame Astro INTU Mastic or equivalent to exposed capping (supplied by others). Damper will require supporting for following steps.

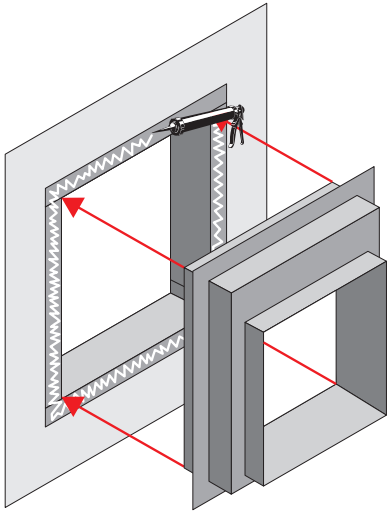

4. Apply sealant to exposed damper plate

Apply Astroflame Astro INTU Mastic or equivalent (supplied by others) to damper plate.

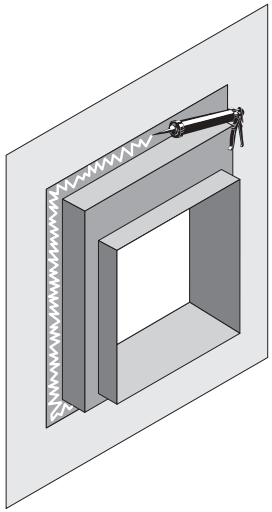

5. Position outer retaining flanges

Supplied by Advanced Air.

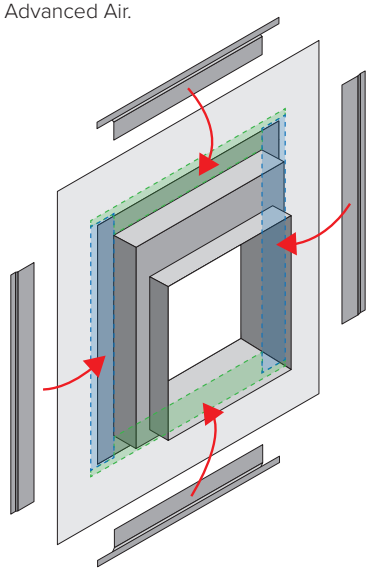

6. Secure damper to wall with screws

M5.5 x 155mm stainless steel self-tapping screws (supplied by others – can be purchased from Trimoterm wall supplier). Maximum 150mm between centres.

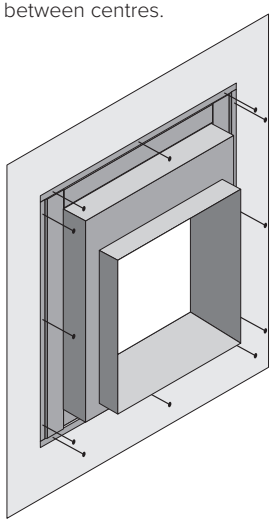

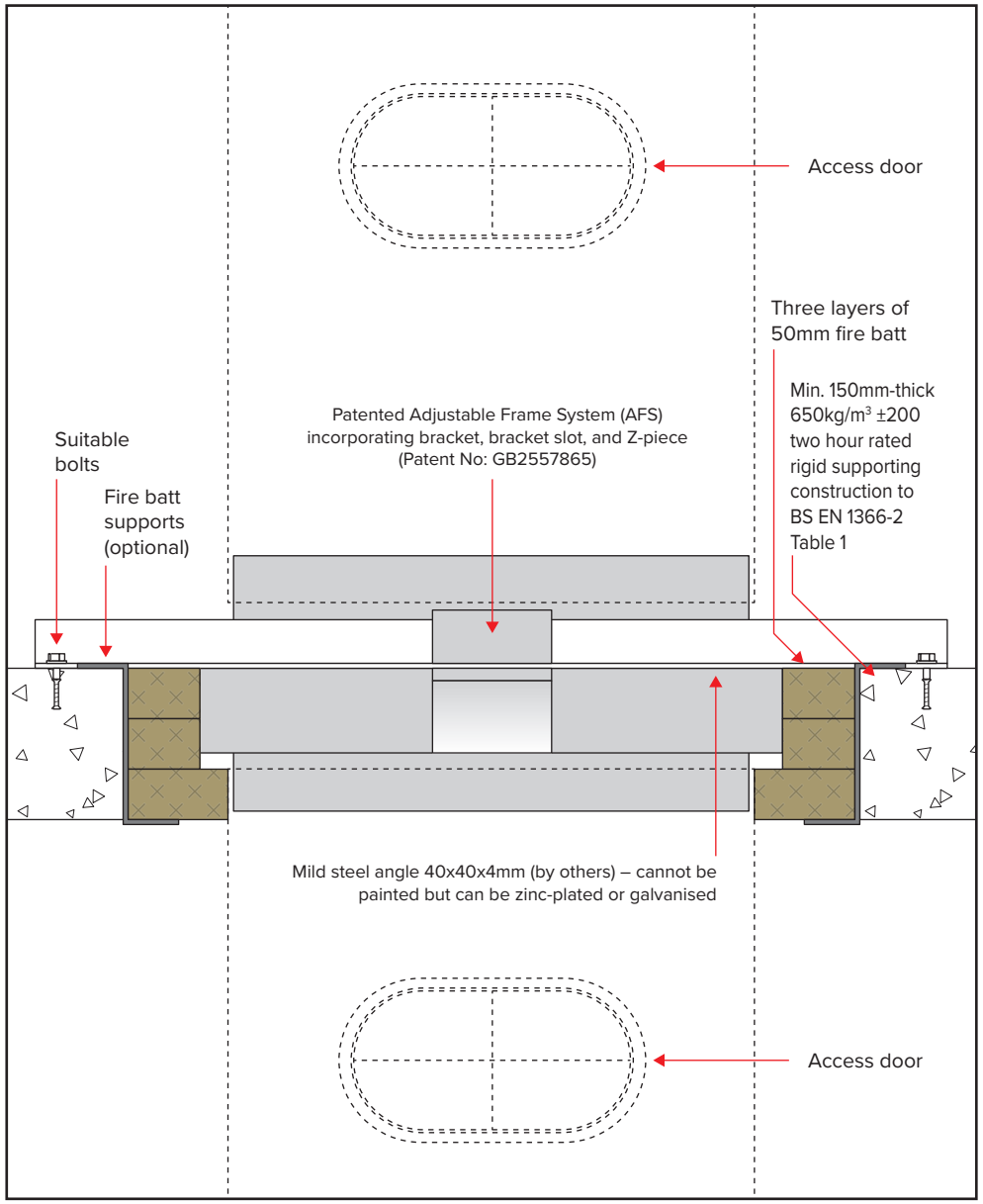

Preparation

1. Ensure that the damper is kept in a clean dry environment and that there is no damage to the damper.
2. Remove all the packaging and transit ties before installation.
3. Work out the opening size to be cut using the adjacent table.

Nom. duct width	Opening width min.	Opening width max.
100-1,000mm	Nom. duct +100mm	Nom. duct +350mm

Nom. duct height	Opening height min.	Opening height max.
100mm	Nom. duct +140mm	Nom. duct +350mm
101-300mm	Nom. duct +165mm	Nom. duct +375mm
301-525mm	Nom. duct +190mm	Nom. duct +400mm
526-700mm	Nom. duct +215mm	Nom. duct +425mm
701-925mm	Nom. duct +240mm	Nom. duct +450mm
926-1,000mm	Nom. duct +265mm	Nom. duct +475mm

NOTE – Dimensions above apply to rectangular, flat oval and circular spigots. Please also see guidance later in this document regarding AFS dampers installed in fire batt.

Installation sequence

4. Install 40mm x 40mm x 4mm angle through the AFS brackets ensuring they are of sufficient length to extend past the opening on each side by 100mm.
5. Position the dampers evenly in the centre of the opening.
6. Secure the angles to the floor. Mark the hole positions on the angle at least 50mm away from the opening. Drill and install M8 steel anchors and bolt the angle to the floor.
7. The galvanised mild steel ductwork connecting to the damper spigot must overlap by 40mm, leaving a 10mm clearance for any duct expansion in a fire situation.
8. The galvanised mild steel ductwork connections must be sealed with an approved galvanised mild steel ductwork sealer and fixed with low resistance fixings such as aluminium rivets that will melt at high temperature allowing the duct to break away without affecting the integrity of the installation.
9. Fire batt supports (by others) are optional to support the first layer of fire batt. These measure 50mm x 150mm x 50mm x 1.6mm thick by 100mm wide. They are folded into a Z-shape and positioned on all fire batt joints on the bottom layer and evenly spaced on a 500mm maximum pitch, one on each side of the damper.
10. The gap between the damper and the floor opening will need filling with three layers of 50mm thick 140kg/m³ fire batt cut to an interference fit and pushed into place. All cut edges must be sealed with a fire batt sealant to BS EN 13501-2. A fire rated intumescent mastic to BS EN 13501-2 shall be applied to each joint.
11. The connecting galvanised mild steel ductwork must be independently supported and have been installed in accordance with DW144.
12. For full adherence to DW145, access doors should be fitted on both sides of the damper for inspection and maintenance of the damper (DW145 clause 9.7).
13. When the damper installation is complete the operation of the damper should be checked.
14. Complete DW145 Fire Damper Certificate.

Important note: It is not possible for a damper to be tested with fire above a damper, therefore as per BS EN 1366-2 Clause 13.5, this installation is suitable for fire in both directions despite a single direction classification, but the damper installation must be carried out in the orientation shown, with AFS rails above the floor.

PRODUCT **0160 WITH AFS RAIL (FLOOR)**	APPLICATION **RIGID SUPPORTING CONSTRUCTION (FLOOR)**
CLASSIFICATION REPORT NO. **EFR-21-001846**	CLASSIFICATION **E120 (ho i → o)**
TESTED INSTALLATION METHOD SHOWN. DIFFERING INSTALLATION METHODS TO THIS MUST BE APPROVED BY THE BUILDING CONTROL AUTHORITY (BCA) BEFORE PROCEEDING.	

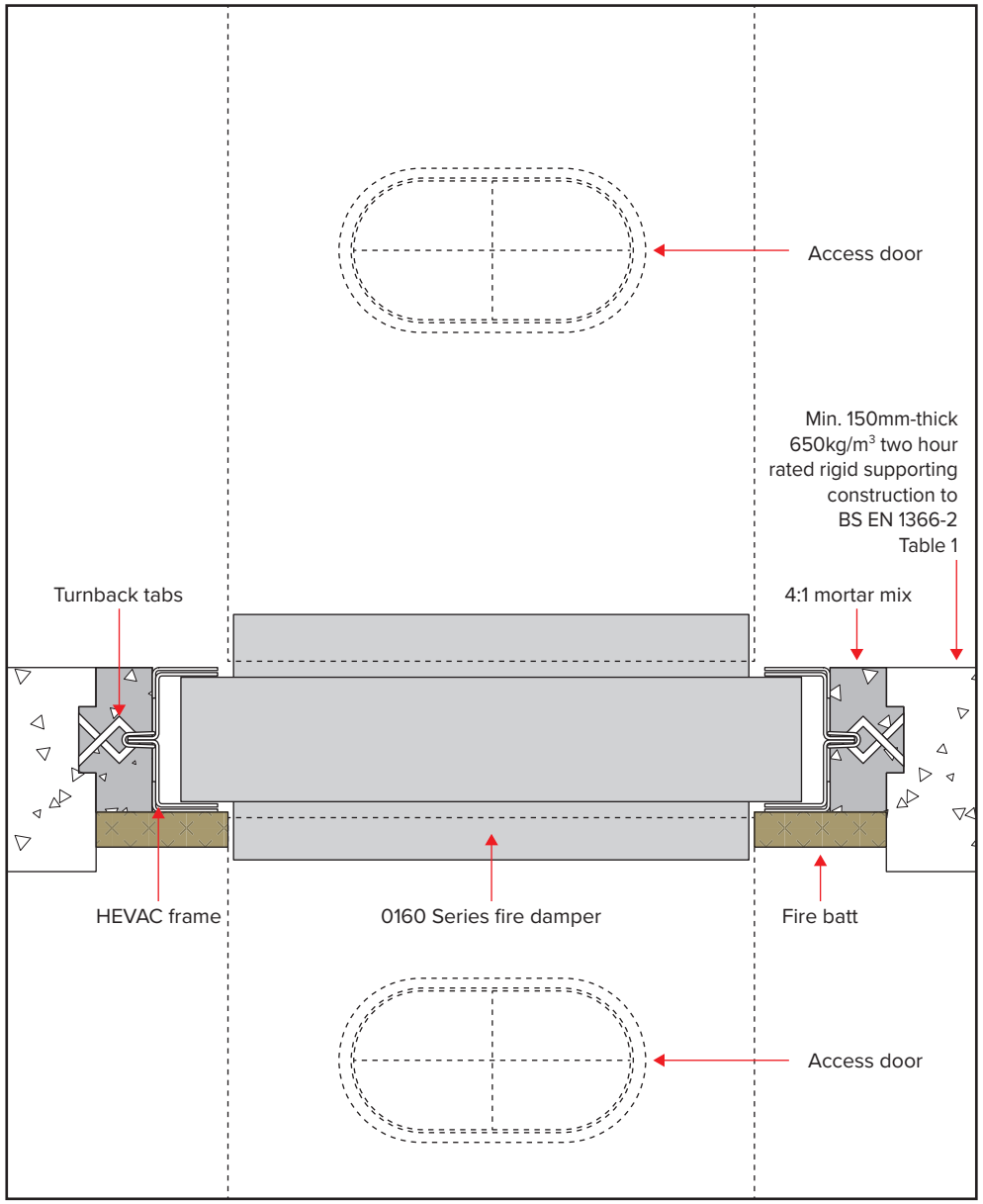

Preparation

1 Ensure that the damper is kept in a clean dry environment and that there is no damage to the damper.

2 Remove all the packaging and transit ties before installation.

3 Work out the opening size to be cut using the adjacent table.

Nom. duct width	Opening width min.	Opening width max.
100-1,000mm	Nom. duct +160mm	Nom. duct +185mm

Nom. duct height	Opening height min.	Opening height max.
100mm	Nom. duct +160mm	Nom. duct +185mm
101-300mm	Nom. duct +185mm	Nom. duct +210mm
301-525mm	Nom. duct +210mm	Nom. duct +235mm
526-700mm	Nom. duct +235mm	Nom. duct +260mm
701-925mm	Nom. duct +260mm	Nom. duct +285mm
926-1,000mm	Nom. duct +285mm	Nom. duct +310mm

NOTE – Dimensions above apply to rectangular, flat oval and circular spigots.

Installation sequence

4 In the opening, mark the positions for the turnback tabs on the HEVAC frame, making sure that the HEVAC casing will sit flush with the floor surface.

5 Create 20mm deep pockets for the HEVAC tabs to be located in. The pockets should be approximately 30mm wide and 50mm long.

6 Offer up the damper into the opening and support from below or clamp angles spanning the opening.

7 Bend the HEVAC tabs so that they lock into the pockets.

8 Fire batt of a minimum 25mm thickness and density of 140kg/m^2 shall be installed under the damper frame to serve as shuttering to facilitate installation of the penetration seal all around the damper.

9 A 4:1 mortar mix can then be gradually applied between the floor and the damper, ensuring the mortar is only filled up to the HEVAC frame and not the damper spigots. This ensures the damper can move within the HEVAC frame.

10 The fire batt shall remain in situ after the mortar has been applied.

11 The galvanised mild steel ductwork connecting to the damper spigots must overlap by up to 40mm, leaving minimum 10mm clearance for any duct expansion in a fire situation.

12 The galvanised mild steel ductwork connections must be sealed with an approved galvanised mild steel ductwork sealer and fixed with low resistance fixings such as aluminium rivets that will melt at high temperature allowing the duct to break away without affecting the integrity of the installation.

13 The connecting galvanised mild steel ductwork must be independently supported and have been installed in accordance with DW144.

14 For full adherence to DW145, access doors should be fitted on both sides of the damper for inspection and maintenance of the damper (DW145 clause 9.7).

15 When the damper installation has been completed, checks should be made to ensure the damper is secure and there is no movement, operation of the damper should be checked.

16 Complete DW145 Fire Damper Certificate.

PRODUCT **0160 WITH HEVAC FRAME (FLOOR)**	APPLICATION **RIGID CONSTRUCTION (FLOOR)**
CLASSIFICATION REPORT NO. **EFR-21-001846**	CLASSIFICATION **E120 (ho i ←→ o)**
TESTED INSTALLATION METHOD SHOWN. DIFFERING INSTALLATION METHODS TO THIS MUST BE APPROVED BY THE BUILDING CONTROL AUTHORITY (BCA) BEFORE PROCEEDING.	

Fire batt

The fire batt used in Advanced Air fire testing is AstroFlame Astro Batt, which we seal with Astroflame INTU Mastic (Trowel grade for sealing cut edges, and Mastic tube for applying to finished joins), with is an Intumescent Ablative Batt sealant. This is a CE certified product tested to EN1366-3, classified to EN 13501- 2, and comprises of a 50mm thick 140kg/m^3 density mineral wool sheet with a ablative Batt coating. The batt should be installed in the number of layers shown on our relevant installation pages.

We recommend the use of these products to ensure compliance with our certified installations, however EN 15882-2:2022 clause 6.3 states that the tested ablative batt may be substituted by an alternative batt, providing it is of at least the same density and thickness, and has the same or better fire resisting characteristics supported by EN 1366-3 fire testing.

Installations from one side of the wall

Installations with drop rods on only one side of the wall can be installed without the need to access the opposite side of the wall, including the fire batt

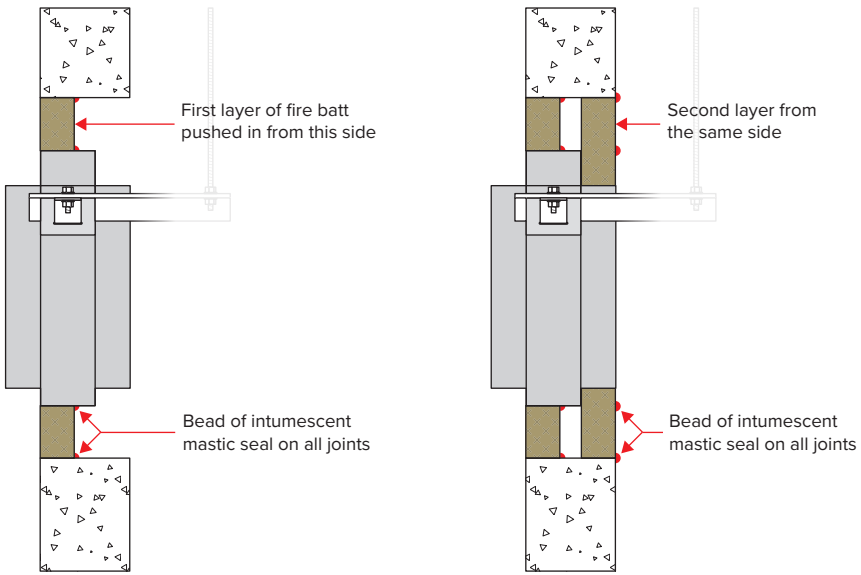

Drop rods

All Advanced Air AFS fire tests are carried out using non-insulated (bare) mild steel M10 threaded drop rods at a length of 1.5 metres or less. Because the majority of fire dampers are installed close to the slab ceiling, and the AFS fixing points are located at the top of the damper, most drop rods for real life applications are likely to be shorter than this tested length.

When installations require drop rod lengths exceeding 1.5 metres, we recommend that they are insulated, and/or oversized, and in these cases we recommend the support is assessed by a structural engineer.

Opening size constraints

The AFS (Adjustable Frame System) installations all use a common opening size based on the overall outer frame size of the damper. We provide some easy to use opening size calculation tables based on the nominal duct size of the damper, and these tables can be found on each corresponding page in this manual. However the following is a more detailed description of what the allowances and limitations are when creating an opening for an AFS damper.

A damper does not have to be centralised within an opening. The maximum permissible distance between the damper case and the inside edge of the opening is 130mm, and there is no lower limit to the minimum permissible size, the only requirement being that there must be adequate room for the installation of the fire batt penetration seal (Advanced Air recommend a minimum of 25mm).

Opening sizes are traditionally rectangular, but the shape of the hole does not actually matter, and unconventional shapes are acceptable providing the maximum constraints of the opening fall within the maximum of 130mm, and there is fire batt installed all around the perimeter of the damper.

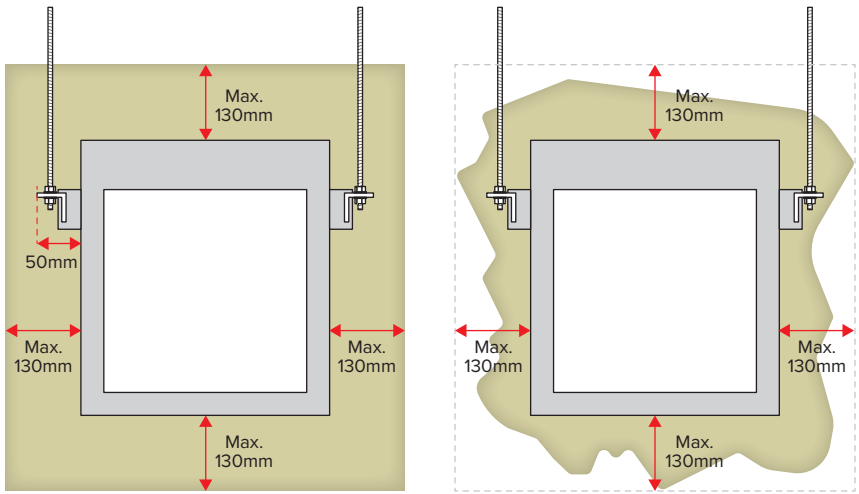

NOTE – The AFS brackets and rails stick out nearly 50mm from either side of the damper case, so space must be allowed for these when sizing the opening.

Wall thickness

The wall for a given installation must meet the minimum thickness shown, however a thicker wall is also permitted. Where the wall is thicker than stated it is important to ensure that the access side of the damper is flush with one side of the wall to provide access for maintenance. The fire batt should be installed in a manner so that the penetration seal thickness is the same as the minimum “as tested” or greater. Installing the fire batt from the same side of the wall (see notes on Installations from one side of the wall on the previous page) may help in these situations.

Spigots for slip joints

Most Advanced Air products come with a duct connection “spigot” which is designed for a slip joint with the mating ductwork.

The connection is made by sliding the ductwork over the damper spigot, and fixing with low resistance fixings (those which will melt in the case of a fire) so that in the event of a fire condition, the ductwork can fall away without causing stress on the damper installation.

A 10mm gap should be left between the damper case and the edge of the ductwork, which prevents the ductwork applying pressure on the damper when it expands in a fire condition.

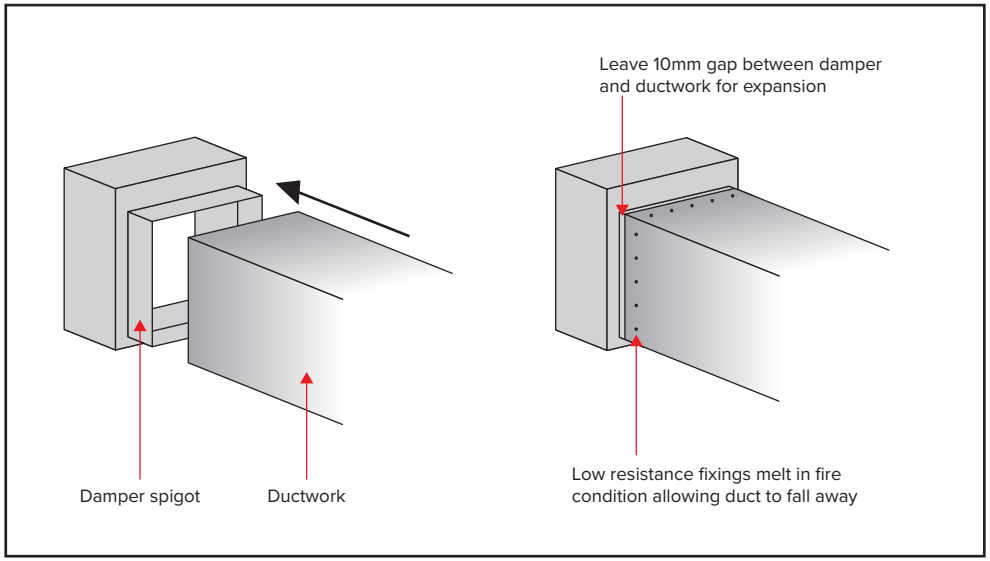

Flange connections

ACE compliant flange connection is possible with Advanced Air products, however Advanced Air products themselves cannot be supplied with a flange connection.

In order to utilise a flange connection with Advanced Air products, a flange to spigot transition piece must be used. The transition goes between the damper spigot and the ductwork, creating a fully CE compliant installation.

The spigot side of the transition should be installed in the same way a duct spigot would be installed (see opposite).

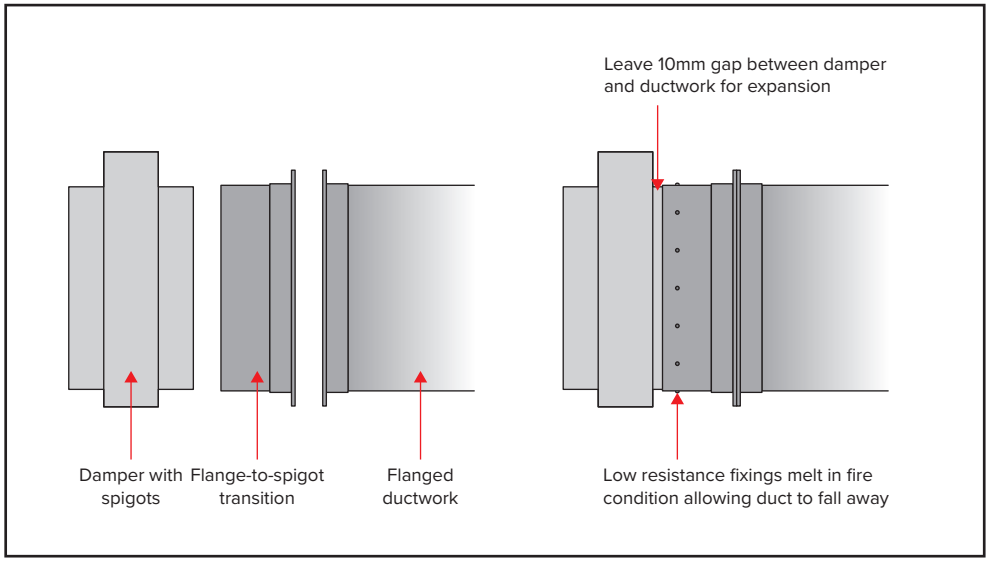

What is slab deflection?

Slab deflection is when the slab layers of a building between each level settle after construction, which can sometimes cause them to deflect, causing the slab to bend and drop. The result is that any services connected to the ceiling slab (such as cable trays, ductwork, or even dampers) will lower too. Is these services are also penetrating walls, which are unlikely to suffer any movement, the penetration seal around where these services pass through the wall may become damaged. This is a serious issue if the walls, and therefore the penetrations, are fire rated.

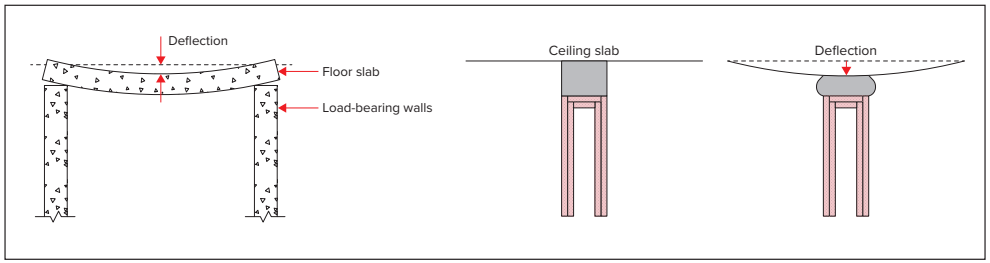

To add further complication to the issue, the join between non load bearing walls and slabs are typically lined with what is referred to as a deflection head, which is a layer of soft material that absorbs the movement of the slab without causing damage to the wall. However it is only recently that contractors and designers have started to think about the effects of deflection for other services, so there are few well known solutions for other services.

Are there any solutions?

There are various solutions on the market place, and the most common solution customers have used with damper and duct products is to install the drop rods that support the ductwork or dampers in a manner that allows these drop rods to pass through the damper and duct fixing points in the event of deflection. Dampers and ductwork should be inspected at regular intervals, and if the securing nuts underneath the mounting points on a damper or ductwork have dropped, due to slab deflection, they can be re-tightened. This restores the support that the drop rods are giving to the products.

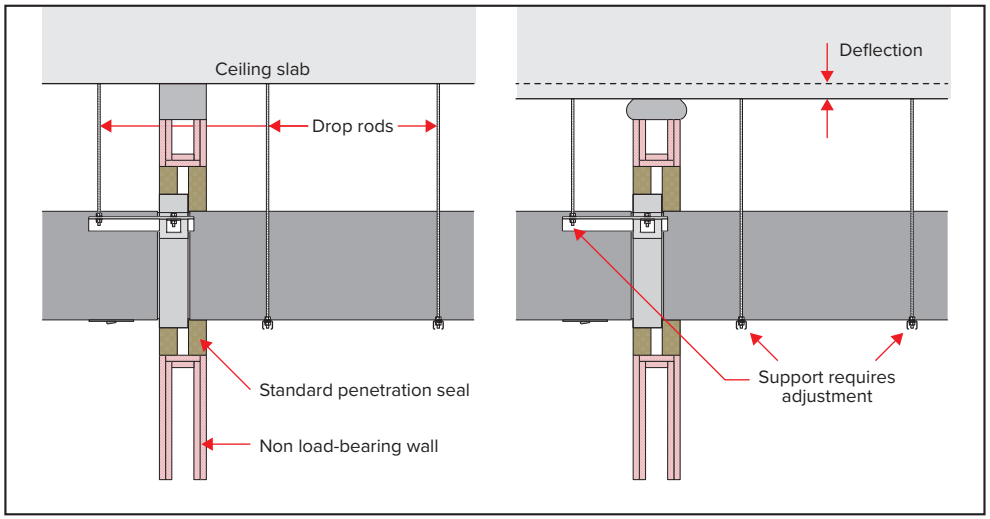

A better way – FlexiCoat® penetration seal for deflection

Because the above solution relies on regular maintenance visits, to restore support by adjusting the fixing nuts on drop rods, Advanced Air have worked with the Mace Group and FSi Limited to design a better solution. This solutions is our “FlexiCoat® seal for deflection” installation, which can be found in this installation manual.

The FlexiCoat® product allows the damper to move downwards with the slab, and this means that as the wall deflects, the damper and ductwork all move with it. This negates the need for maintenance teams to make adjustments to the installation. In the same way the interconnecting ductwork can also be allowed to lower with the slab, as the slab, dampers and ductwork all move together.

If you want to ensure slab deflection will not cause damage to the installation of your dampers and ductwork, we highly recommend using this installation method wherever high levels of slab deflection are expected to occur.

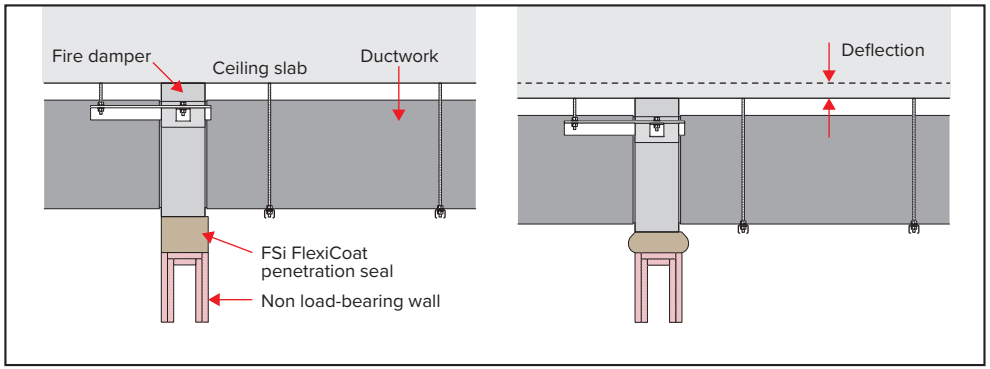

Supporting construction

BS EN 1366-2:2015 section 7.3 states “the distance between the fire dampers shall not be less the 200mm.” Specific wall manufacturers may require a larger distance between dampers due to the nature of their wall.

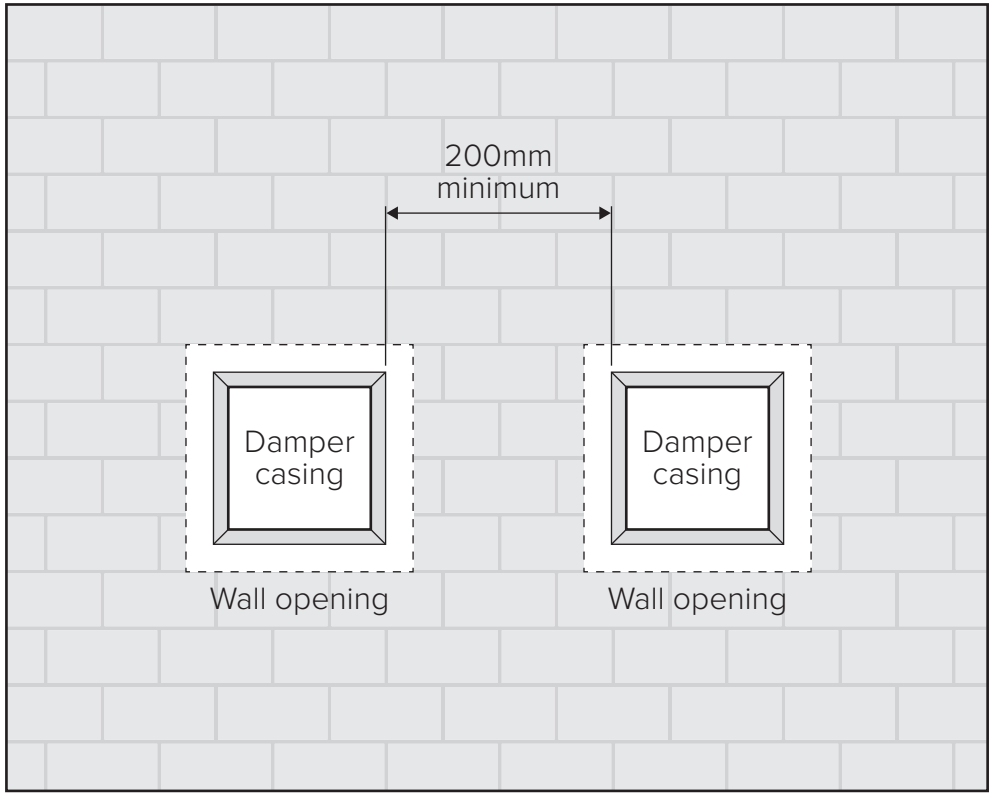

Multiple ducts in one large opening is not currently included in a harmonised standard, but this is being investigated by standards committees.

Surrounding construction

BS EN 1366-2:2015 section 13.6 states “minimum separation of 75mm between fire damper and a construction element (wall / floor).”

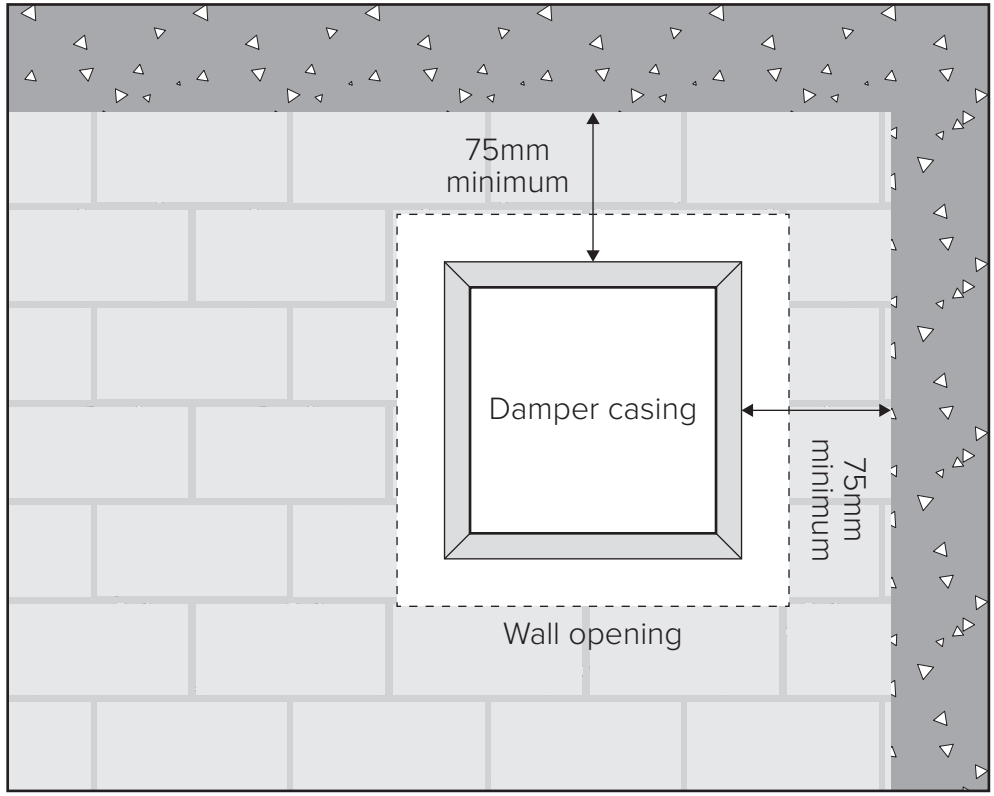

Acceptability of mixed construction walls

The question of whether “mixed construction” walls are acceptable is regularly discussed on projects – this is where a wall is made from both plasterboard (Flexible) and blockwork/concrete (Rigid) elements which mean that the sides of the damper opening are different. A few examples are shown below and the Rigid element could be another continuation of the wall, or even an opposing wall or slab.

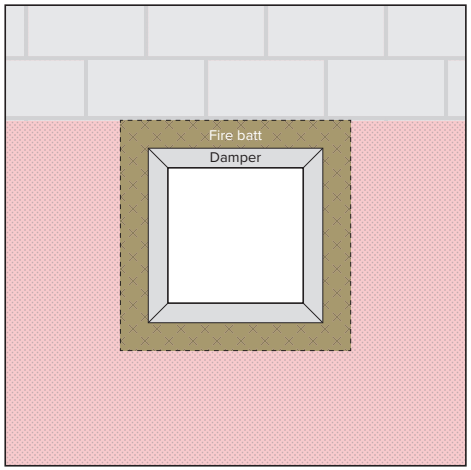

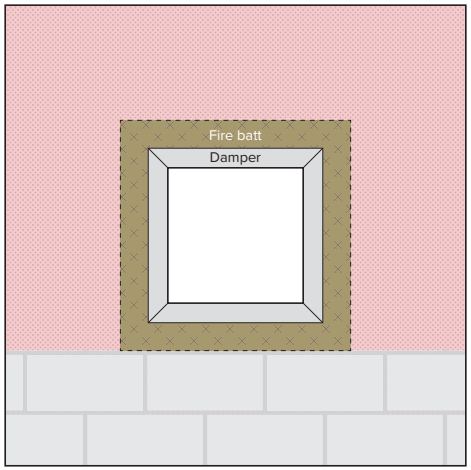

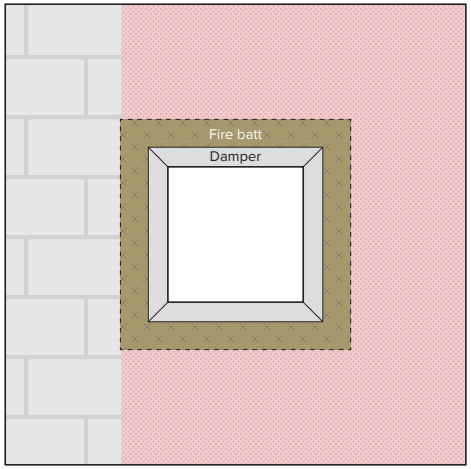

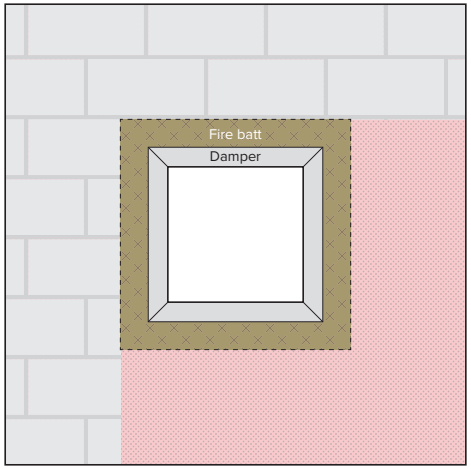

Compliance with BS EN 1366-2

The direct field of application in BS EN 1366-2 states that products tested in Flexible walls are also suitable for installation into Rigid supporting constructions. It is therefore reasonable to assume that a mixed construction would be acceptable on the same basis. For further clarification we contacted our notified body, the BRE, who were able to provide a written statement that mixed constructions are acceptable. A copy of this correspondence is available upon request.

It is important to remember that where a given side of the opening is an opposing wall or floor/ceiling slab, rule BS EN 1366-2 clause 13.6 should be observed, which requires a gap of at least 75mm between the damper case and any opposing wall or floor/ceiling slab as shown below:

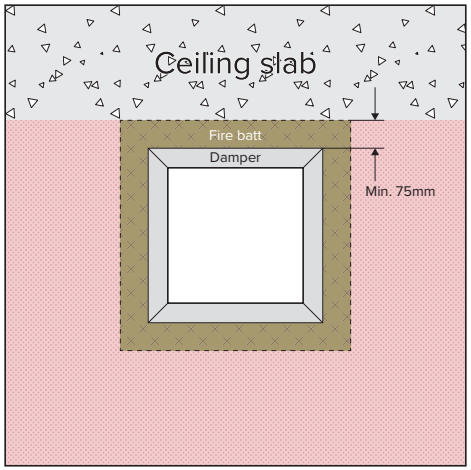

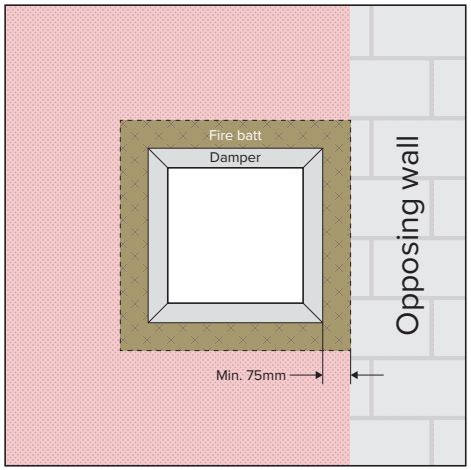

Initial operating check

The 0160 fire damper should only be commissioned once installation has been completed.

The damper should be inspected thoroughly to ensure that it is clean and free of any internal debris before the damper is tested as per the following instructions;

- Remove the access door or doors, (on some installations access doors are required on both sides of the damper to enable the resetting of the damper). If a transportation tie is still fitted to the link, remove it.
- The 0160 fire damper is fitted with an EML fusible link, this link is provided with a release latch on the access side of the damper. To test the damper the latch is released allowing the blades to drop and the link is retained on a pivot opposite to the latch.
- Before testing the damper, check that the blade pack is sitting level to the drop direction, if they are sitting uneven before testing this could result in damage to the blades and spring system.
- Release the latch on the EML, the blades will drop quickly under the force of the springs and gravity, ensure that hands and arms are away from the direction of blade travel.

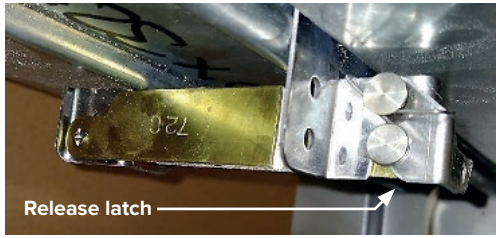

- Visually inspect the damper blades to ensure that they are all interlocked, that the springs are straight and that the bottom damper is locked into the locking ramp on both sides of the damper. NB;
  - On vertically installed dampers 750 high and above, it is OK for these not to have springs and locking ramps fitted.

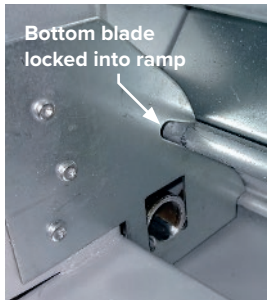

- To reset the damper, the bottom blade will need to be pushed away from the locking ramp, then keeping the bottom blade level push the blade pack upwards into the top of the damper. When the top has been reached the EML fusible link can then be swung into position and secured with the latch. NB;
  - For larger dampers independent supports may be required to hold the blade pack in position whilst securing the latch.
  - Dampers 149mm and under will have a ring pull fitted to enable the blade to be pulled away from the locking ramps, on these sizes the release latch is on the opposite side of the locking ramps. This is the reason access doors are required on both sides of the damper.
- Refit the access door and complete any relevant reports.

Maintenance

0160 fire dampers are installed as a life safety product and it is essential that they are always maintained so they are in a clean working condition. In accordance with BS9999 Annex W.1 maintenance and inspection should be undertaken annually.

Maintain the dampers as follows;

- Remove the access door to internally inspect the damper.
- Visually inspect all damper components for signs of corrosion, obstructions and build-up of dirt/dust.
- Remove any obstructions, wipe away all dirt and dust from the damper blades, sides and duct surfaces.
- Examine the EML fusible link to ensure that no corrosion has occurred.
- If the EML fusible link is required to be replaced, then should be done as follows:
  - Use independent supports or hold the damper blade pack in position.
  - Release the EML latch, the link will now drop and pivot on the opposite side.
  - To release the link from the retaining bracket, hold the link and lift it upwards in its retaining slot then pull it away from the bracket.
  - To fit a new link push it into the slot of the bracket on the non-access side of the damper.
  - Rotate it upwards and secure with the release latch
- Test and check the damper by the method detailed in the 'Initial Operating Check'.
- Refit the access door and complete maintenance reports as appropriate.

Fire Damper Checklist

DW 145 Inspection & Handover Check Sheet to be completed by the installer with a separate certificate for each damper.

No.	Question	Guidelines	Tick
1	Are the dampers the correct type?	Fire Damper Model 0160, 0400MAN Fire Damper Model 2550, 2530, 26SCD and 0400FME	
2	Are the dampers correctly identified?	Identification label clearly shows the damper individual reference number	
3	Are the dampers located correctly?	The damper position matches the position as detailed on the manufactures installation instructions	
4	Have supports for both the damper and the adjacent ductwork been installed in accordance with the approved method?		
5	Are the dampers fitted in the correct orientations?	The dampers are installed the correct way up relative to airflow and access	
6	Is access, through the ductwork to the damper unobstructed?	There is unobstructed space to allow safe access to damper, also through ceiling void and adjacent services	
7	Confirm the space around the damper has not been used for the passage of other services	The presence of other services will invalidate the installation method	
8	Using the access opening provided, confirm that the damper has been left in the open position		
9	Release the damper catch to simulate the thermal release mechanism (damper drop test)	Ensure the blade operation is free from interference	
10	Check damper blades for damage	With the damper in the closed position inspect for damage	
11	Re-set damper and replace access panel	After resetting check that if supplied the visual position indicator is correct	
12	Is the fire barrier and penetration seal complete?	Confirm at handover if installation is complete and if no then other trades will be required to finish	
13	Handover damper installation for commissioning	Obtain relevant acceptance of the damper installation from the nominated person responsible	

Project		Installer Name	
Damper ID No:		Company	
Location		Date	
Type		I hereby confirm the damper detailed has been installed and tested according to the manufactures recommendations	
Model No:		Signature	